WELDING ACCESSORIES

WELDING ACCESSORIES

WELDING CABLE

● RUBBER WELDING CABLE （H01N2-D）

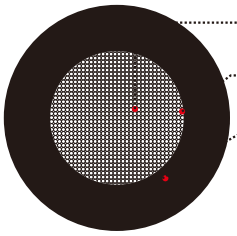

Standard: DIN VDE 0282-6
Rating voltage: 100/100V
Working temperature: -30℃-70℃
Available Rubber Jacket Colour: Black, Blue, Red,Orange

Nominal sections(mm^2)	Dia.of strands max(mm)	Thickness of sheath(mm)	Average of O.D.(mm)		Max.conductor resistance@20℃(Ω/km)	
			Min	Max	TC	BC
10	0.21	2.0	7.7	9.7	1.95	1.91
16	0.21	2.0	8.8	11.0	1.24	1.21
25	0.21	2.0	10.1	12.7	0.795	0.780
35	0.21	2.0	11.4	14.2	0.565	0.554
50	0.21	2.2	13.2	16.5	0.393	0.386
70	0.21	2.4	15.3	19.2	0.277	0.272
95	0.21	2.6	17.1	21.4	0.210	0.206
120	0.21	2.8	19.2	24.0	0.164	0.161
150	0.21	3.0	21.1	26.4	0.132	0.129
185	0.21	3.2	23.1	28.9	0.108	0.106

● PVC WELDING CABLE

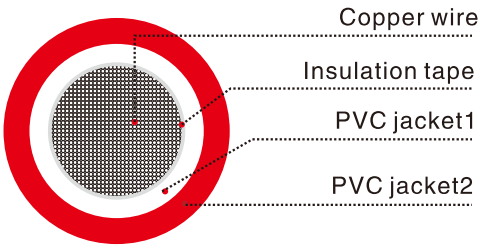

Rating voltage: 100/100V
Working temperature: -15℃-70℃
Available PVC Jacket Colour: Black, Blue, Red, Orange, White

Nominal sections(mm^2)	coppers(mm)	Thickness of sheath(mm)	Average of o.d(mm)		Max.conductor resistance@20℃(Ω/km)	Nominal weight (kg/km)
	No./dia.		Min.	Max.		
16	513 × 0.20	2.0	9.0	11.5	1.21	240
25	798 × 0.20	2.0	10.5	13.0	0.780	350
35	1121 × 0.20	2.0	11.5	14.5	0.554	450
50	1596 × 0.20	2.2	13.5	17.0	0.386	625
70	2220 × 0.20	2.4	15.5	19.5	0.272	825
95	3034 × 0.20	2.6	17.0	22.0	0.206	1125
120	1702 × 0.20	2.8	19.0	24.0	0.161	1380

ZHEJIANG LISSAM WELDING EQUIPMENT CO.,LTD
Http:// www.lissam.com E-mail: lissam@vip.163.com

CABLE LUG

CLU-01

50mm²/70mm²/95mm²

CLU-02

35mm²/50mm²

CLU-03

200A/300A/400A/500A

CLU-04

25mm²/35mm²/50mm²

CLU-05

16–6 25–6 35–8
16–8 25–8 35–10
16–10 25–10 35–12

50–10 70–10 95–10 120–10
50–12 70–12 95–12 120–12

CLU–06

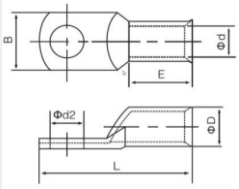

CLU–07

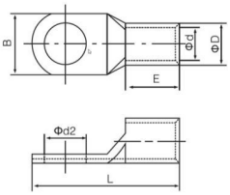

ITEM NO.	Dimension(mm)					
	ϕd2	B	L	ϕD	ϕd	E
AWG8*#10	5.1	11.8	33.3	7.1	4.8	13
AWG8*#1/4	6.8	11.8				
AWG8*#5/16	8.3	11.8				
AWG8*#3/8	10.4	14.5				
AWG8*#1/2	13.1	17				
AWG6*#10	5.1	11.8	37.3	8.1	5.9	15
AWG6*#1/4	6.8	13.7				
AWG6*#5/16	8.3	13.7				
AWG6*#3/8	10.4	13.7				
AWG6*#1/2	13.1	17				
AWG4*#1/4	6.8	13.8	36.9	9.5	7.3	15.5
AWG4*#5/16	8.3	13.8				
AWG4*#3/8	10.4	14.5				
AWG4*#1/2	13.1	17				15
AWG2*#1/4	6.8	16.5	41.1	11.1	8.5	16
AWG2*#5/16	8.3	16.5				
AWG2*#3/8	10.4	16.5				
AWG2*#1/2	13.1	17				15.3
AWG1*#1/4	6.8	16.4	43.6	11.7	9.1	16
AWG1*#5/16	8.3	16.4				
AWG1*#3/8	10.4	17.1				
AWG1*#1/2	13.1	19.1				
AWG1/0*1/4	6.8	18.4	46.8	13	10.4	19
AWG1/0*5/16	8.3	18.4				
AWG1/0*3/8	10.4	18.4				
AWG1/0*1/2	13.1	21				
AWG2/0*1/4	6.8	21	52.4	14.2	11.7	22
AWG2/0*5/16	8.3	21				
AWG2/0*3/8	10.4	21				
AWG2/0*1/2	13.1	21				21
AWG3/0*5/16	8.3	23.1	55.9	15.7	13	22.5
AWG3/0*3/8	10.4	23.1				
AWG3/0*1/2	13.1	23.1				
AWG4/0*5/16	8.3	25.8	60.5	17.2	14.2	24
AWG4/0*3/8	10.4	25.8				
AWG4/0*1/2	13.1	25.8				

ITEM NO.	Dimension(mm)					
	ϕd2	B	L	ϕD	ϕd	E
A–SC6–5	5.2	9.2	22	5.1	3.7	8
A–SC6–6	6.5	9.8	23	5.1		
A–SC6–8	8.5	12	24	5.3		
A–SC6–10	10.3	12.8	24	5.3		
A–SC10–5	5.2	10.3	24	6.4	4.5	9
A–SC10–6	6.5	10.3	24	6.4		
A–SC10–8	8.5	12	25	6.4		
A–SC10–10	10.3	13.2	26.5	6.3		
A–SC16–6	6.5	11	27.5	7.3	5.7	11
A–SC16–8	8.5	12.5	29.5	7.3		
A–SC16–10	10.5	14	30	7.5		
A–SC25–6	6.5	13.1	32.5	9	7.2	13.5
A–SC25–8	8.5	13.1	33			
A–SC25–10	10.5	14.5	34			
A–SC25–12	13	16.5	37			
A–SC35–6	6.5	158.8	36	10.5	8.5	14.5
A–SC35–8	8.5	15.8	37			
A–SC35–10	10.5	15.8	38			
A–SC35–12	13	17.4	38			
A–SC50–6	6.5	18.1	41	12.5	9.8	17
A–SC50–8	8.5	18.1	42.5			
A–SC50–10	10.5	18.2	44			
A–SC50–12	13	18.2	44			
A–SC70–6	6.5	21	48.5	14.5	11.5	19.5
A–SC70–8	8.5	21	48.5			
A–SC70–10	10.5	21	50			
A–SC70–12	13	21	50			
A–SC70–14	15	21	50			
A–SC70–16	17	23	50			
A–SC95–8	8.5	24.8	57	17	13.7	23.5
A–SC95–10	10.5	24.8	57			
A–SC95–12	13	24.8	57			
A–SC95–14	15	24.8	57			
A–SC95–16	17	26	57			

WELDING ACCESSORIES

ELECTRODE HOLDER

EH-01 300A/500A

EH-02 300A/500A

EH-03 300A/500A

EH-04 300A/500A

EH-05 300A/400A/500A/600A

EH-06 300A/500A

EH-07 300A/500A/600A

EH-08 300A/500A

EH-09 150A

EH-10 200A

EH-11 200A/400A

EH-12 200A/250A/300A/400A/500A

EH-13 200A/250A/300A/400A/500A

EH-14 300A/500A

EH-15 200A/300A/500A

ZHEJIANG LISSAM WELDING EQUIPMENT CO.,LTD
Http:// www.lissam.com E-mail: lissam@vip.163.com

EH-16 500A

EH-17 500A

EH-18 300A/500A

EH-19 500A

EH-20 400A/600A

EH-21 400A/600A

EH-22 300A/500A

EH-23 300A/400A/500A

EH-24 300A/500A

EH-25 300A/400A/500A

EH-26 500A

EH-27 500A

EH-28 500A

EH-29 500A

EH-30 300A/500A

WELDING ACCESSORIES

EARTH CLAMP

EC-01 200A

EC-02 600A

EC-03 600A

EC-04 200A

EC-05 200A/300A/500A

EC-06 200A/300A/500A

EC-07 200A/300A/500A

EC-07P 200A/300A/500A

EC-08 200A/300A/500A

EC-09 400A/500A

400A

500A

EC-10 500A

EC-11 500A

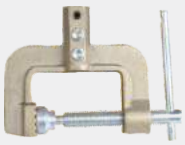

EC-12 500A

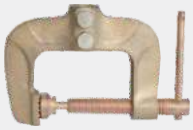

EC-13 300A/500A

300A

500A

EC-14 200A/300A/500A

200A

500A

EC-14P 200A/300A/500A

EC-15 300A–500A

300A

500A

EC-16 300A/500A

300A

500A

ZHEJIANG LISSAM WELDING EQUIPMENT CO.,LTD
Http:// www.lissam.com E-mail: lissam@vip.163.com

EC–16P 300A/500A

EC-17 300A/500A

EC-18 500A

EC-19 200A

EC-20 300A

EC-21 200A

EC–22 200A/300A/400A/600A

EC-23 300A/400A/500A

EC-24 200A

EC-25 300A/500A

EC-26 500A

EC-27 300A/600A

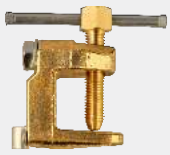

EC-28 500A

EC-29 1200A

EC-30 1500A

EC-31 1200A

WELDING ACCESSORIES

CABLE CONNECTOR

CC-01
300A/500A

CC-02
300A/500A

CC-03
10–25mm²/16–35mm²/35–50mm²/50–70mm²/70–95mm²

Female Male

CC-04
10–25mm²/35–70mm²/70–95mm²

Female Male

CC-05
600A

CC-06
600A

CC-07
300A/500A

CC-08
10–25mm²/35–50mm²

CC-09
10–25mm²/35–50mm²/50–70mm²

CC-10
10–25mm²/35–50mm²/50–70mm²/70–95mm²

CC-11
10–25mm²/35–50mm²/50–70mm²/70–95mm²

CC-12
10–25mm²/35–50mm²/50–70mm²/70–95mm²

CC-13
95–120MM²

CC-14
300A/500A

ZHEJIANG LISSAM WELDING EQUIPMENT CO.,LTD
Http:// www.lissam.com E-mail: lissam@vip.163.com

GOUGING TORCH

GTK–3 600A

GTK–4 1000A

GTK–5 1250A

GTK–3000 600A

GTK–4000 1000A

GTF–2 600A

GOUGING CARBON RODS

JOINT COPPER COATED

Part No.	Dia. X Length (mm)	Current Range(A)
GCR208(D)(E)	8x355(430)(455)	500–550
GCR210(D)(E)	10x355(430)(455)	600–650
GCR211(D)	11x355(430)	750–850
GCR212(D)	12x355(430)	800–1000
GCR213(D)(E)(F)	13x355(430)(455)(510)	800–1000
GCR216(D)(E)(F)	16x355(430)(455)(510)	1000–1200
GCR219(D)(E)(F)	19x355(430)(455)(510)	1200–1400
GCR225D	25x430	1400-1600

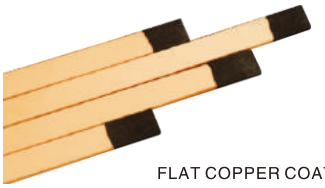

FLAT COPPER COATED

Part No.	Dia. X Length (mm)	Current Range(A)
GCR3325	3x25x355	300-350
GCR3412(B)	4x12x355(305)	200-250
GCR3510(B)	5x10x355(305)	300-350
GCR3512(B)	5x12x355(305)	350-450
GCR3515(B)	5x15x355(305)	450-550
GCR3518(B)(D)	5x18x355(305)(430)	600-700
GCR3520(B)(C)	5x20x355(305)(400)	700-800
GCR3525(C)(E)	5x25x355(400)(455)	800-900
GCR3620(B)	6x20x355(305)	780-850

ROUND COPPER COATED

Part No.	Dia. X Length (mm)	Current Range(A)
GCR103.2	3.2x305	130–180
GCR104(A)	4x305(355)	150–200
GCR105(A)	5x305(355)	200–250
GCR106(A)(E)	6x305(355)(455)	300–350
GCR106.5(A)	6x305(355)	320–370
GCR107A	7x355	350–400
GCR108(A)(E)	8x305(355)(455)	400–450
GCR109(A)	9x305(355)	450–500
GCR109.5(A)	9.5x305(355)	500–550
GCR110(A)(E)	10x305(355)(455)	550–600
GCR111(A)	11x305(355)	600–650
GCR112(A)	12x305(355)	750–850
GCR112.7(A)	12.7x305(355)	800–1000
GCR113(A)(E)	13x305(355)(455)	800–1000
GCR116(A)	16x305(355)	1000–1200
GCR119(A)	19x305(355)	1200–1400

WELDING ACCESSORIES

ELECTRODE OVEN

EOV-01-5 EOV-01-10 EOV-01-25

Model No.	EOV-01-5	EOV-01-10	EOV-01-25	EOV-01-70
Electrode Capacticy	5KG	10KG	25KG	70KG
Input Voltage	AC240V AC/DC 60V-110V	AC240V AC/DC 60V-110V	AC240V AC/DC 60V-110V	AC240V AC/DC 60V-110V
Power	270W/120W	360W/180W	600W/300W	1000W
Max.Temperature	150℃	50℃-150℃	50-150℃	50-150℃
Electrode length	500mm	500mm	500mm	500mm
Chamber Size	ϕ73×502mm	ϕ98×502mm	ϕ197×502mm	ϕ352×502mm
Overall Size(L×W×H)	186×148×578mm	220×235×578mm	318×295×578mm	475×588×580mm
Weight	3.8KG	5.3KG	13.2KG	38.4KG

Option: Thermometer, Digital display

EOV-01-70

Option:

Rubber seat
sleeve and rubber pad

Leather insulating sleeve

EOV-02-5 EOV-02-10

EOV-03-5 EOV-03-10 EOV-04-5 EOV-04-10

Model No.	EOV-02-5	EOV-02-10
Electrode Capacticy	5KG	10KG
Input Voltage	AC220V AC/DC 60-120V	AC220V AC/DC 60-120V
Power	260/120W	360/180W
Max.Temperature	150℃	150℃
Electrode length	450mm	450mm
Chamber Size	ϕ86×485H	ϕ108×485H
Overall Size(L×W×H)	ϕ162×697H	ϕ185×697H
Weight	3.8KG	4.2KG

Model No.	EOV-03-5	EOV-03-10	EOV-04-5	EOV-04-10
Electrode Capacticy	5KG	10KG	5KG	10KG
Input Voltage	AC 220V	AC 220V	AC 220V	AC 220V
Power	600W	700W	600W	700W
Electrode length	450mm	450mm	450mm	450mm
Max.Temperature	50℃-300℃	50℃-300℃	50℃-300℃	50℃-300℃
Overall Size(L×W×H)	187×208×615	220×255×610	187×208×615	220×255×610
Weight	5.1KG	5.6KG	4.8KG	5.3KG
	Thermometer			

EOV-06-5

EOV-06-10

EOV-07-5

EOV-07-10

EOV-08-5

EOV-08-10

EOV–09–5

Model No.	EOV-06-5	EOV-06-10	EOV-07-5	EOV-07-10	EOV-08-5	EOV-08-10
Electrode Capacticy	5KG	10KG	5KG	10KG	5KG	10KG
Input Voltage	AC 230V		AC 220V/230V AC/DC60-110V			
Power	500W	600W	500W 50W-190W	600W 80W-240W	500W 50W-190W	600W 80W-240W
Max.Temperature	50℃-200℃		150℃±15℃	150℃±15℃	150℃±15℃	150℃±15℃
Electrode length	450mm	450mm	450mm	450mm	450mm	450mm
Overall Size(L×W×H)	ϕ196×635mm	ϕ230×646mm	168×188×635mm	202×232×646mm	168×188×610mm	202×232×615mm
Weight	2.9KG	5.1KG	3.2KG	4.3KG	2.9KG	4.2KG

Model No.	EOV–09–5
Electrode Capacticy	5KG
Input Voltage	AC 220V
Power	320W
Max.Temperature	50℃–320℃
Chamber Size	ϕ78 x (400+65)
Overall Size(L×W×H)	ϕ175 x 548H
Weight	3.1KG

ZHEJIANG LISSAM WELDING EQUIPMENT CO.,LTD
Http:// www.lissam.com E–mail: lissam@vip.163.com

ELECTRODE OVEN

EOV-10-20

EOV-10-20

EOV-10-10

EOV-11-5

EOV-12-5

Model No.	EOV-10-20	EOV-10-10	EOV-11-5	EOV-12-5
Capacticy	20KG	10KG	5KG	
Max.Temperature	50℃-350℃	100℃	150℃	
Voltage	AC 230V			
Power	800W	238W	205W	
Electrode Length	450MM		400MM	500MM
Size of inner cavity	156×435	110×470	86×420	86×509
Overall size(L×W×H)	380×648	218×195×600	120×140×600	170×210×720
Weight	13KG	5.1KG	3.6KG	4.5KG

Thermometer

EOV-13-5

Model No.	EOV-13-5
Electrode Capacticy	5KG
Input Voltage	AC 230V OR 120V
Power	238W/195W
Electrode Length	450MM
Max.Temperature	150℃
Chamber Size	ϕ88×493H
Overall size(L×W×H)	140×203×615
Weight	4.3KG

EOV-15-5 EOV-15-10

EOV-14-5B EOV-14-5T EOV-14-10B EOV-14-10T

Model No.	EOV-14-5B	EOV-14-5T	EOV-14-10B	EOV-14-10T	EOV-15-5	EOV-15-10
Electrode Capacticy	5KG		10KG	10KG	5KG	10KG
Input Voltage	AC 220V OR AC. DC 11OV				AC 220V	
Power	205W		238W		300W	360W
Max.Temperature	50℃-150℃				50℃-300℃	
Electrode Length	450MM					
Chamber Size	ϕ86×465H		ϕ108×465H		ϕ86×465H	ϕ108×465H
Overall size(L×W×H)	145×200×590		210×167×590		165×195×670	190×225×670
Weight	3.9KG	3.8KG	4.3KG	4. 2KG	4. 1KG	5. 0KG

WELDING ACCESSORIES

DRYER OVEN

- Stainless steel material
- Heating with stainless steel electric heating tube

EDO-50S

EDO-50

EDO-100

EDO-150

EDO-200

EDO-300S

Model	EDO-50	EDO-50S	EDO-100	EDO-100S	EDO-150	EDO-150S	EDO-200	EDO-300S
Electrode Capacticy	50KG		100KG		150KG		200KG	300KG
Electrode Length	450MM		450MM		450MM		450MM	450MM
Input Voltage	240V/380V		240V/380V		240V/380V		240V/380V	240V/380V
Power	2400W		2400W		3000W		3000W	4800W
Work Temperature	50℃-350℃		50℃-350℃		50℃-350℃		50℃-350℃	50℃-350℃
Number of chamber	3		3		4		5	10
Inner Size	270×305×530		360×435×530		370×635×530		380×540×780	635×840×530
Overall size(L×W×H)	435×635×720		525×800×720		535×905×720		540×720×1145	1015×1030×720
Weight	63KG		85KG		104KG		110KG	180KG
	Thermometer	Digital Display Table	Thermometer	Digital Display Table	Thermometer	Digital Display Table	Digital Display Table	Digital Display Table

- Automatic control,temperature display
- Internal Chamber is made of stainless steel material
- Adopt stainless steel heating tube with ring even distribution
- Convenient flux charge and discharge,match with flux drum

FDO-100 FDO-200

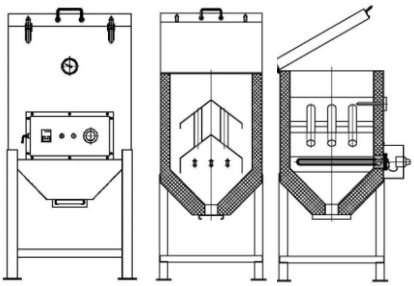

Model	FDO-100L	FDO-200L
Work Temperature	50℃-300℃	50℃-300℃
Input Voltage	AV220V	AV200V
Power	3KW	3KW
Piece of heating tube	3	3
Capacity of flux	75KG	150KG
Overall size(L×W×H)	500×630×1108	600×730×1115
Weight	74KG	85KG

ZHEJIANG LISSAM WELDING EQUIPMENT CO.,LTD
Http:// www.lissam.com E-mail: lissam@vip.163.com

MIG TORCH

●PUSHPULL RANGE

Technical Data	PG 4000/PW 5000	QTLB-24D/36D
Cooling Method	Air/Water-cooled	Air-cooled
Rating : Co_2	400/500A	200/350A
Rating : mixed gas	350/400A	160/300A
Duty Cycle :	40%/100%	60%
Wire Size :	0.8-1.2/1.6	0.6/0.8-1.2

●SPOOL RANGE

Technical Data	QLBF-200III	QLBF-185	QTLB –24D/36D–SP
Cooling Method	Air–cooled	Air-cooled	Air-cooled
Rating : Co_2	200A	180A	200/350A
Rating : mixed gas	160A	160A	160/300A
Duty Cycle :	60%	60%	60%
Wire Size :	0.6-1.0	0.8-0.9	0.6/0.8-1.2

MIG TORCH

LBN200

Rating:200A CO_2 150A mixed gas, 60% duty cycle. wires:0.030"-0.045"(0.8-1.2mm).

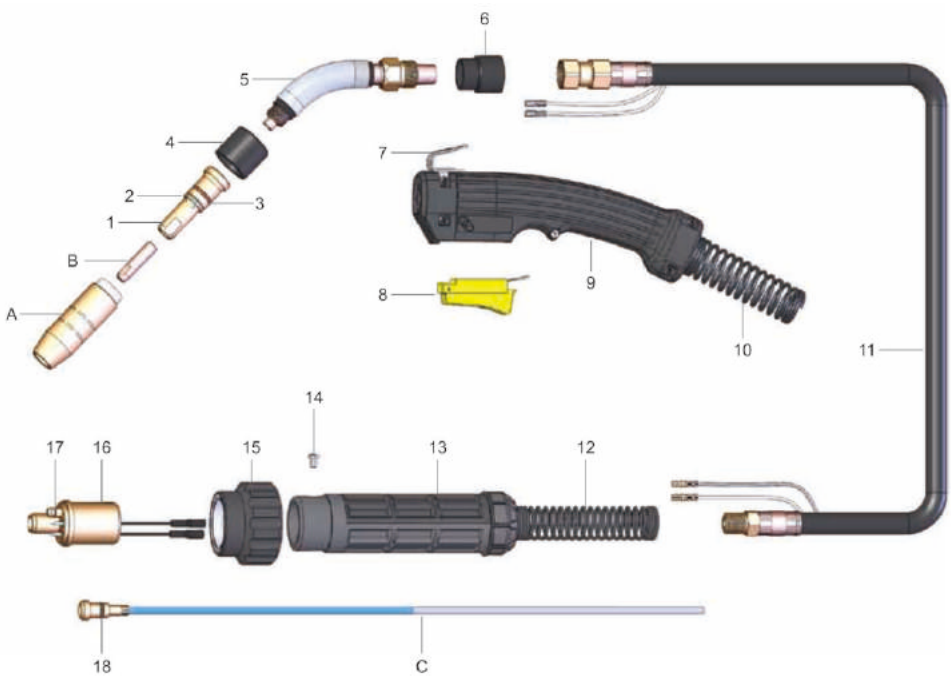

Model			
Description	Part Number		
Welding Gun c/w Euro Fitting	10ft/3m	12ft/3.6m	15ft/4.5m
	LBN200–10	LBN200–12	LBN200–15

Nozzles		
No.	Part Number	Description
A	4391	Brass Nozzle 5/8"
	4392*	Brass Nozzle 1/2"
	4393	Copper Nozzle 5/8"
	4394	Copper Nozzle 1/2"

Contact Tips		
B	7488	Contact Tip 0.030"/0.8mm Ecu
	7489*	Contact Tip 0.035"/0.9mm Ecu
	7496	Contact Tip 0.040"/1.0mm Ecu
	7490	Contact Tip 0.045"/1.2mm Ecu

Liners		
C	43110*	035"–0.45"/0.9–1.2mm × 10ft/3m / Steel Liner.035"–.045/0.9–1.2mm × 10ft/3m
	43115	035"–0.45"/0.9–1.2mm × 15ft/4.5m / Steel Liner.035"–.045/0.9–1.2mm × 15ft/4.5m
	43110T	035"–0.45"/0.9–1.2mm × 10ft/3m / Teflon Liner.035"–.045/0.9–1.2mm × 10ft/3m
	43115T	035"–0.45"/0.9–1.2mm × 15ft/4.5m / Teflon Liner.035"–.045/0.9–1.2mm × 15ft/4.5m

Compontents		
No.	Part Number	Description
1	4335	Gas Diffuser
2	Q1401413	Circlip For 4335
3	Q512518S	O–Ring 12.5 × 1.8
4	4323	Rubber Cap
5	4786	Gun Neck
6	4780	Insulating Nut
7	EG0002	Hanger Hook
8	BEJ2005	Trigger Switch
9	BEH2101	Handle
10	HS2101	Front Spring Cable Support
11	BEL2010	Cable Assembly 10ft/3m
	BEL2012	Cable Assembly 12ft/3.6m
	BEL2015	Cable Assembly 15ft/4.5m
12	ES2201	Back Spring Cable Support
13	EH2201	Back Handle
14	EH2211	Screw M4 × 6
15	EP3001	Gun Plug Nut
16	BEU2001	Bernard Euro Gun Plug
17	Q504010	O–Ring 4 × 1
18	Q505217	O–Ring 5.28 × 1.78

*Denoter Standard Build

ZHEJIANG LISSAM WELDING EQUIPMENT CO.,LTD
Http:// www.lissam.com E–mail: lissam@vip.163.com

MIG TORCH

LBN300

Rating:300A CO_2 200A mixed gas, 60% duty cycle. wires:0.030"-0.045"(0.8-1.2mm).

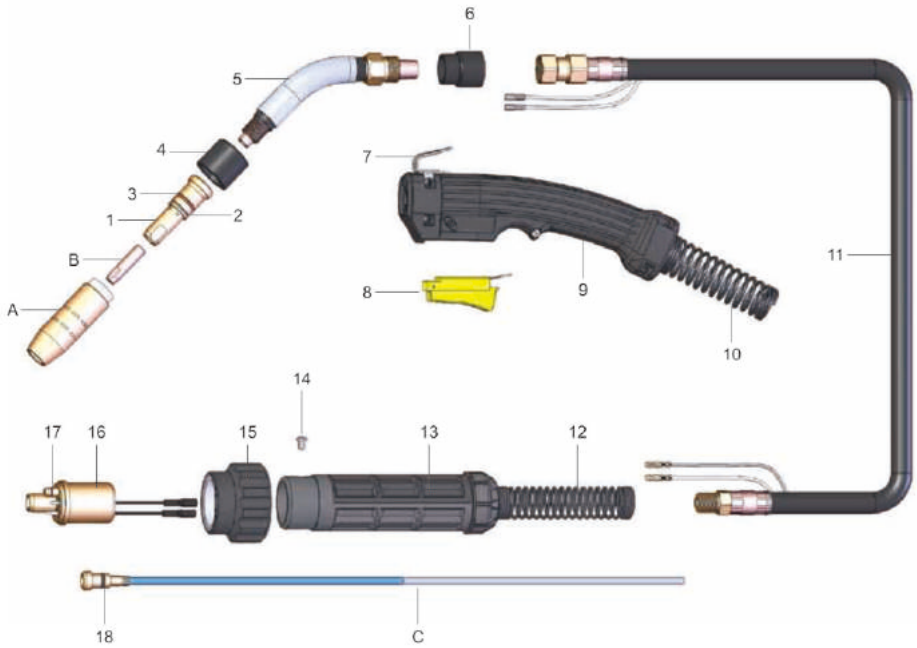

Model			
Description	Part Number		
Welding Gun c/w Euro Fitting	10ft/3m	12ft/3.6m	15ft/4.5m
	LBN300–10	LBN300–12	LBN300–15

Nozzles		
No.	Part Number	Description
A	4391	Brass Nozzle 5/8"
	4392*	Brass Nozzle 1/2"
	4393	Copper Nozzle 5/8"
	4394	Copper Nozzle 1/2"

Contact Tips		
B	7488	Contact Tip 0.030"/0.8mm Ecu
	7489*	Contact Tip 0.035"/0.9mm Ecu
	7496	Contact Tip 0.040"/1.0mm Ecu
	7490	Contact Tip 0.045"/1.2mm Ecu

Liners		
C	43110*	Steel Liner.035"–.045/0.9–1.2mm × 10ft/3m
	43115	Steel Liner.035"–.045/0.9–1.2mm × 15ft/4.5m
	43110T	Teflon Liner.035"–.045/0.9–1.2mm × 10ft/3m
	43115T	Teflon Liner.035"–.045/0.9–1.2mm × 15ft/4.5m

Compontents		
No.	Part Number	Description
1	4335	Gas Diffuser
2	Q1401413	Circlip For 4335
3	Q512518S	O–Ring 12.5 × 1.8
4	4323	Rubber Cap
5	4786	Gun Neck
6	4780	Insulating Nut
7	EG0002	Hanger Hook
8	BEJ2005	Trigger Switch
9	BEH2101	Handle
10	HS2101	Front Spring Cable Support
11	BEL2010	Cable Assembly 10ft/3m
	BEL2012	Cable Assembly 12ft/3.6m
	BEL2015	Cable Assembly 15ft/4.5m
12	ES2201	Back Spring Cable Support
13	EH2201	Back Handle
14	EH2211	Screw M4 × 6
15	EP3001	Gun Plug Nut
16	BEU2001	Bernard Euro Gun Plug
17	Q504010	O–Ring 4 × 1
18	Q505217	O–Ring 5.28 × 1.78

*Denoter Standard Build

WELDING ACCESSORIES

MIG TORCH

LBN400

Rating:400A CO_2 320A mixed gas, 60% duty cycle. wires:0.030"-1/16"(0.8-1.6mm).

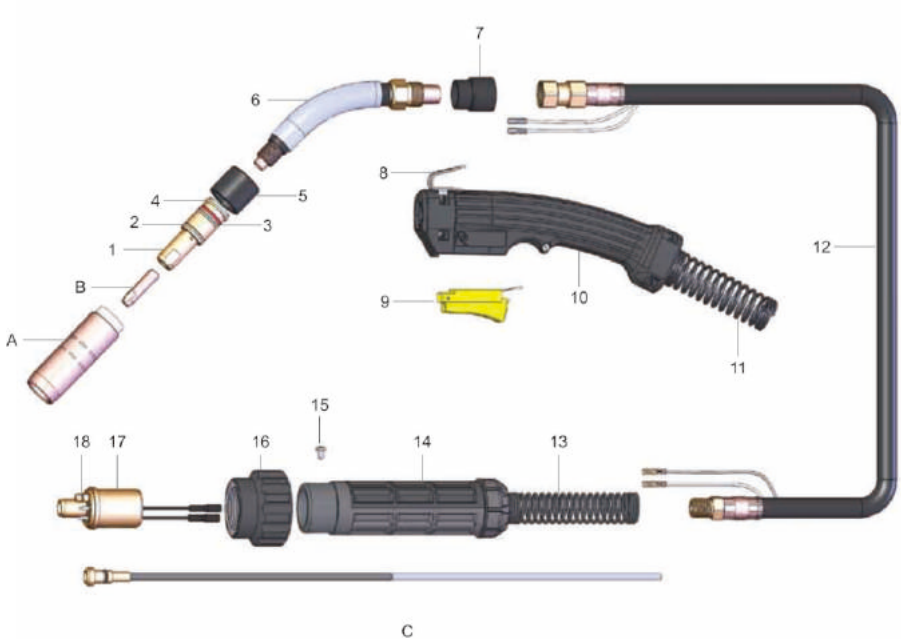

Model			
Description		Part Number	
Welding Gun c/w Euro Fitting	10ft/3m	12ft/3.6m	15ft/4.5m
	LBN400–10	LBN400–12	LBN400–15

Nozzles		
No.	Part Number	Description
A	4491	Brass Nozzle 3/4"
	4492	Brass Nozzle 9/16"
	4491*	Copper Nozzle 3/4"

Contact Tips		
B	7488	Contact Tip 0.030"/0.8mm Ecu
	7489	Contact Tip 0.035"/0.9mm Ecu
	7496	Contact Tip 0.040"/1.0mm Ecu
	7490*	Contact Tip 0.045"/1.2mm Ecu
	7498	Contact Tip 0.052"/1.4mm Ecu
	7491	Contact Tip 1/16"/1.6mm Ecu

Liners		
C	44210*	Steel Liner.045"–1/16"/1.2–1.6mm × 10ft/3m
	44215	Steel Liner.045"––1/16"/1.2–1.6mm × 15ft/4.5m
	44210T	Teflon Liner.045"–1/16"/1.2–1.6mm × 10ft/3m
	44215T	Teflon Liner.045"––1/16"/1.2–1.6mm × 15ft/4.5m

Compontents		
No.	Part Number	Description
1	4335	Gas Diffuser
2	Q1416715	Circlip For 4335
3	Q515617S	O–Ring 15.6 × 1.78
4	Q1217516	Shap Ring For 4435
5	4423	Rubber Cap
6	4790	Gun Neck
7	4780	Insulating Nut
8	EG0002	Hanger Hook
9	BEJ2005	Trigger Switch
10	BEH2101	Handle
11	KS3101	Front Spring Cable Support
	BEL4010	Cable Assembly 10ft/3m
	BEL4012	Cable Assembly 12ft/3.6m
12	BEL4015	Cable Assembly 15ft/4.5m
13	ES3201	Back Spring Cable Support
14	EH2201	Back Handle
15	EH2211	Screw M4 × 6
16	EP3001	Gun Plug Nut
17	BEU2001	Bernard Euro Gun Plug
18	Q504010	O–Ring 4 × 1
19	Q505217	O–Ring 5.28 × 1.78

*Denoter Standard Build

ZHEJIANG LISSAM WELDING EQUIPMENT CO.,LTD
Http:// www.lissam.com E–mail: lissam@vip.163.com

MIG TORCH

LTW–1

Rating:180A CO_2 125A mixed gas, 60% duty cycle. wires:(0.023"-0.045")0.6-1.2mm.

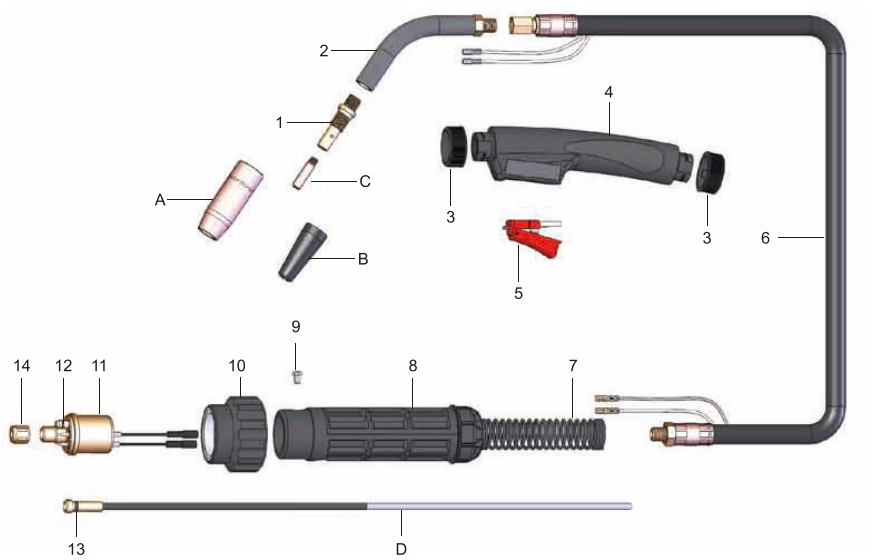

Model			
Description	Part Number		
	3m	4m	5m
Welding Gun c/w Euro Fitting*	LTW1–3E	LTW1–4E	LTW1–5E
Welding Gun c/w Tweco Fitting	LTW1–3T	LTW1–4T	LTW1–5T
Welding Gun c/w Lincoln Fitting	LTW1–3L	LTW1–4L	LTW1–5L
Welding Gun c/w Miller Fitting	LTW1–3M	LTW1–4M	LTW1–5M

Nozzles		
No.	Part Number	Description
A	21–37	Nozzle Self Insulated
	21–50*	Nozzle Self Insulated
	21–62	Nozzle Self Insulated
	21–37F	Nozzle Self Insulated
	21–50F	Nozzle Self Insulated
	21–62F	Nozzle Self Insulated
	LA8201	Nozzle Sel Shielding

Contact Tips		
C	11–23	Contact Tip 0.023"/0.6mm Ecu
	11–30*	Contact Tip 0.030"/0.8mm Ecu
	11–35	Contact Tip 0.035"/0.9mm Ecu
	11–40	Contact Tip 0.040"/1.0mm Ecu
	11–45	Contact Tip 0.045"/1.2mm Ecu

Compontents		
No.	Part Number	Description
1	51	Gas Diffuser
2	61–45	Conductor Tube 45°
	61–55	Conductor Tube 55°
3	EH–1111	Locking Nut
4	EH–1101	Handle
5	EJ0003	Trigger
6	TEL 1030	Cable assembly 3m
	TEL 1040	Cable assembly 4m
	TEL 1050	Cable assembly 5m
7	ES 2101	Back Spring Cable Support
8	EH2101	Gun Plug Housing
9	EH2211	Screw M4 × 6
10	EP2001	Gun Plug Nut
11	TEU1001	Tweco Euro Gun Plug
12	Q504010	O–Ring 4 × 1
13	Q504018	O–Ring4 × 1.8
14	TEU1011	Nut M11 × 1

Liners		
D	42–3035–15*	Steel Liner0.030"–0.035"/0.8–0.9mm × 15ft
	42T–3035–15	Teflon Liner0.030"–0.035"/0.8–0.9mm × 15ft

*Denoter Standard Build

MIG TORCH

LTW–2

Rating:200A CO_2 150A mixed gas, 60% duty cycle wires:0.6-1.2mm(0.023"-0.045")

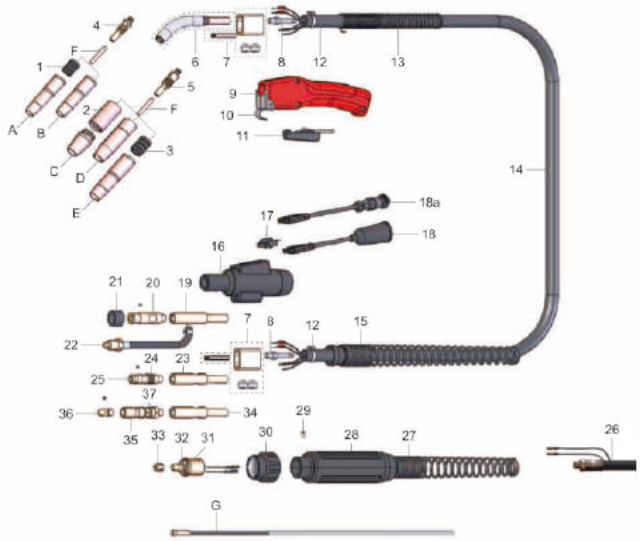

Model			
Description	Part Number		
	3m	4m	5m
Welding Gun c/w Euro Fitting	LTW2–3E	LTW2–4E	LTW2–5E
Welding Gun c/w Tweco Fitting*	LTW2–3T	LTW2–4T	LTW2–5T
Welding Gun c/w Lincoln Fitting	LTW2–3L	LTW2–4L	LTW2–5L
Welding Gun c/w Miller Fitting	LTW2–3M	LTW2–4M	LTW2–5M

Nozzles		
No.	Part Number	Description
A	22–50*	Nozzle Adjustable
	22–62	Nozzle Adjustable
B	22–50F	Nozzle Self Insulated
C	24CT50S	Nozzle Fixed Coarse Thread
	24CT62S	Nozzle Fixed Coarse Thread
	24CT75S	Nozzle Fixed Coarse Thread
D	23–50	Nozzle Self Insulated
	23–62	Nozzle Self Insulated
	23–75	Nozzle Self Insulated
E	24A50	Nozzle Adjustable
	24A62	Nozzle Adjustable
	24A75	Nozzle Adjustable

Contact Tips		
F	14–23	Contact Tip 0.023"/0.6mm Ecu
	14–30	Contact Tip 0.030"/0.8mm Ecu
	14–35*	Contact Tip 0.035"/0.9mm Ecu
	14–40	Contact Tip 0.040"/1.0mm Ecu
	14–45	Contact Tip 0.045"/1.2mm Ecu
	14H–35	Contact Tip 0.035"/0.9mm Ecu HD
	14H–40	Contact Tip 0.040"/1.0mm Ecu HD
	14H–45	Contact Tip 0.045"/1.2mm Ecu HD

Liners		
G	42–3035–15	Steel Liner 0.030"–0.035"/0.8–0.9mm × 15ft
	42–4045–15*	Steel Liner 0.040"–0.045"/1.0–1.2mm × 15ft
	42T–3545–15	Teflon Liner 0.035"–0.045"/0.9–1.2mm × 15ft

Compontents		
No.	Part Number	Description
1	32*	Adjustable Nozzle Insulator
2	34CT	Nozzle Insulator Coarse Thread
3	34A	Adjustable Nozzle Insulator
4	52	Gas Diffuser
5	52FN	Gas Diffuser
6	62A–45J*	Jacketed Conductor Tube 45°
	62A–60J	Jacketed Conductor Tube 60°
7	102	Cable Connector Block Assembly
8	62N	Gas Nipple
9	84HD–R	Handle w/Screws,Red
10	154HD	Hanger Hook
11	92	Trigger Switch
12	144–6S	Cable Hose Clamp
13	HDL–2030	Front Spring Cable Support
14	HDL–2040	Cable Assembly 10m
	HDL–2050	Cable Assembly 12m
		Cable Assembly 15m
15	R185–S	Back Spring Cable Support
16	R185–H	Gun Plug Housing w/Screws
17	194	Connector Tab Assembly
18	LAK–354	2 Pin Plug Assembly
18a	MSAK–354	Miller 2 Pin Plug Assembly
19	R172–UAG	Connector Pulg w/Gas Hole
20	R174–L	Connector,Lincoln
21	HDN0201	Connector Insulator
22	HDN0201	Gas Hose Assembly
23	R172–UA	Connector Pulg
24	Q511818	O–Ring 11.8 × 1.8
25	R174–T	Connector,Tweco
26	HDL2030E	Cable Assembly 10m, Use w/Euro Fitting
	HDL2040E	Cable Assembly 12m, Use w/Euro Fitting
	HDL2050E	Cable Assembly 15m, Use w/Euro Fitting
27	EA0374	Spring
28	MT0077	Rear End Assembly Complete
29	EH2211	Screw M4 × 6
30	EP3001	Gun Plug Nut
31	TEU1001	Tweco Euro Gun Plug
32	Q504010	O–Ring 4 × 1
33	TEU1011	Nut M11 × 1
34	R172–UA	Connector Pulg
35	R174–M	Connector
36	174M–N	Contact Tip
37	Q512526	O–Ring 12.5 × 2.65

ZHEJIANG LISSAM WELDING EQUIPMENT CO.,LTD
Http:// www.lissam.com E–mail: lissam@vip.163.com

LTW–4

Rating:400A CO_2 350A mixed gas, 60% duty cycle. wires:0.030"-5/64"(0.8-2.0mm)

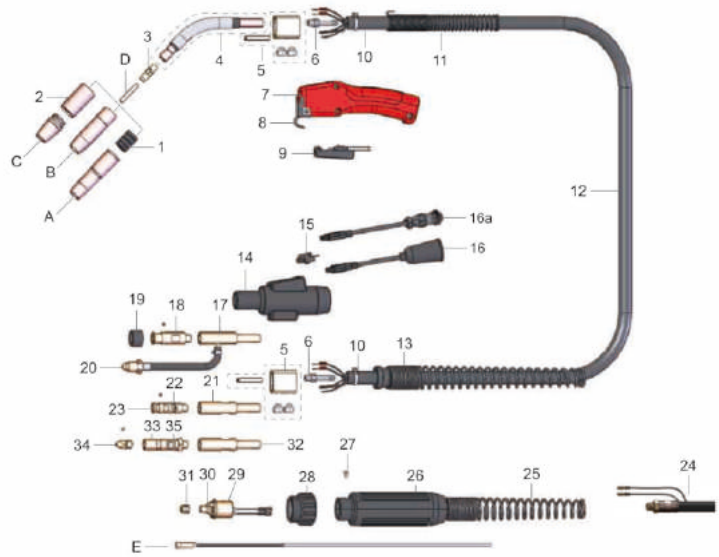

Model			
Description	Part Number		
	3m	4m	5m
Welding Gun c/w Euro Fitting	LTW4–3E	LTW4–4E	LTW4–5E
Welding Gun c/w Tweco Fitting*	LTW4–3T	LTW4–4T	LTW4–5T
Welding Gun c/w Lincoln Fitting	LTW4–3L	LTW4–4L	LTW4–5L
Welding Gun c/w Miller Fitting	LTW4–3M	LTW4–4M	LTW4–5M

Nozzles		
No.	Part Number	Description
A	24A50	Nozzle Adjustable
	24A62*	Nozzle Adjustable
	24A75	Nozzle Adjustable
	24AH50	Nozzle Heavy Duty
	24AH62	Nozzle Heavy Duty
	24AH75	Nozzle Heavy Duty
B	23–50	Nozzle Self Insulated
	23–62	Nozzle Self Insulated
	23–75	Nozzle Self Insulated
C	24CT50S	Nozzle Fixed Coarse Thread
	24CT62S	Nozzle Fixed Coarse Thread
	24CT75S	Nozzle Fixed Coarse Thread

Contact Tips		
D	14–35	Contact Tip 0.025"/0.9mm Ecu
	14–45	Contact Tip 0.045"/1.2mm Ecu
	14–52	Contact Tip 0.052"/1.3mm Ecu
	14–116	Contact Tip 1/16"/1.6mm Ecu
	14H–35	Contact Tip 0.035"/0.9mm Ecu HD
	14H–45	Contact Tip 0.045"/1.2mm Ecu HD
	14H–52	Contact Tip 0.052"/1.3mm Ecu HD
	14H–116	Contact Tip 1/16"/1.6mm Ecu HD
	14H–564	Contact Tip 5/64"/2.0mm Ecu HD

Liners		
E	44–3545–15	Steel Liner 0.035"–0.045"/0.9–1.2mm × 15ft
	44–116–15*	Steel Liner 1/16"/16mm × 15ft
	44–564–15	Steel Liner 5/64"/2.0mm × 15ft
	44T–3545–15	Teflon Liner 0.035"–0.045"/0.9–1.2mm × 15ft
	44T–116–15	Teflon Liner 1/16"/1.6mm × 15ft

Compontents		
No.	Part Number	Description
1	34A*	Adjustable Nozzle Insulator
2	34CT	Nozzle Insulator Coarse Thread
3	54A	Gas Diffuser
4	64A–45J*	Jacketed Conductor Tube 45°
	64A–60J	Jacketed Conductor Tube 60°
5	104	Cable Connector Block Assembly
6	64N	Gas Nipple
7	84HD–R	Handle w/Screws,Red
8	154HD	Hanger Hook
9	92	Trigger Switch
10	134–14	Cable Hose Clamp
11	144–6S	Front Spring Cable Support
12	HDL4030B	Cable Assembly 10m
	HDL4040B	Cable Assembly 12m
	HDL4050B	Cable Assembly 15m
13	R185–S	Back Spring Cable Support
14	R185–H	Gun Plug Housing w/Screws
15	194	Connector Tab Assembly
16	LAK–354	2 Pin Plug Assembly
16a	MSAK–354	Miller 2 Pin Plug Assembly
17	R174–UAG	Connector Pulg w/Gas Hole
18	R174–L	Connector,Lincoln
19	HDN0201	Connector Insulator
20	HDW0201	Gas Hose Assembly
21	R172–UA	Connector Pulg
22	Q511818	O–Ring 11.8 × 1.8
23	R174–T	Connector,Tweco
24	HDL4030BE	Cable Assembly 10m, Use w/Euro Fitting
	HDL4040BE	Cable Assembly 12m, Use w/Euro Fitting
	HDL4050BE	Cable Assembly 15m, Use w/Euro Fitting
25	EA0374	Spring
26	MT0077	Rear End Assembly Complete
27	EH2211	Screw M4 × 6
28	EP3001	Gun Plug Nut
29	TEU1001	Tweco Euro Gun Plug
30	Q504010	O–Ring 4 × 1
31	TEU1011	Nut M11 × 1
32	R172–UA	Connector Pulg
33	R174–M	Connector
34	174M–N	Contact Tip
35	Q512526	O–Ring 12.5 × 2.65

MIG TORCH

LBI 15

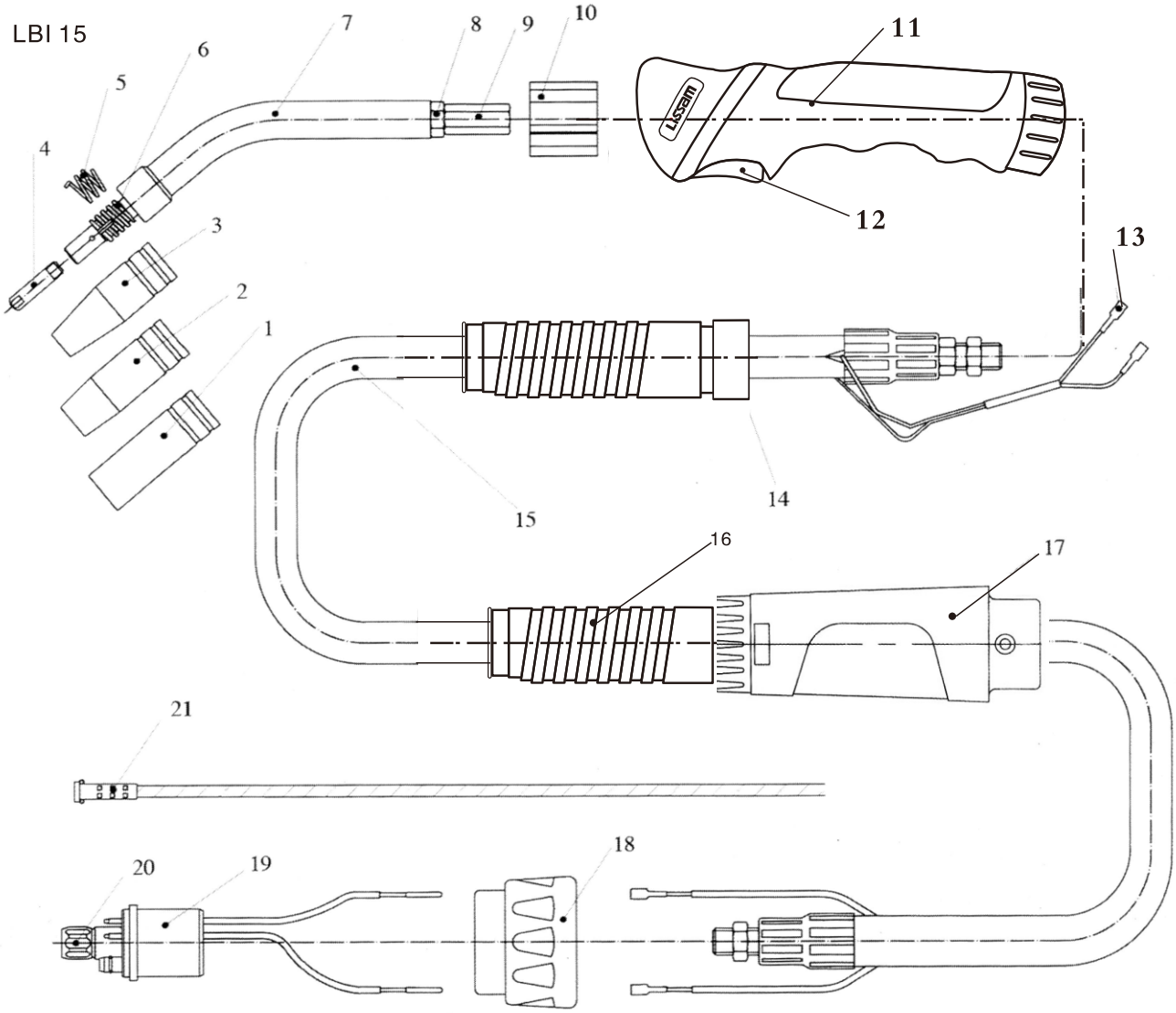

Technical Data

Rating	180A CO_2
	150A Mixed Gases
Duty Cycle	60%
Wire Size	0.6–1.0mm

No.	Description	Part No.
	LBI 15 Complete Torch–3M	LS 002.0449
	LBI 15 Complete Torch–4M	LS 002.0450
	LBI 15 Complete Torch–5M	LS 002.0451
1	Cylindrical Nozzle Φ16mm	LS 145.0041
2	Conical Nozzle Φ12mm	LS 145.0075
3	Tapered Nozzle Φ9.5mm	LS 145.0123

ZHEJIANG LISSAM WELDING EQUIPMENT CO.,LTD
Http:// www.lissam.com E-mail: lissam@vip.163.com

No.	Description	Part No.
4	M6 X 25 X 0.6 Contact Tip, E–Cu	LS 140.0008
	M6 X 25 X 0.8 Contact Tip, E–Cu	LS 140.0059
	M6 X 25 X 0.9 Contact Tip, E–Cu	LS 140.0177
	M6 X 25 X 1.0 Contact Tip, E–Cu	LS 140.0253
	M6 X 25 X 1.2 Contact Tip, E–Cu	–
	M6 X 25 X 0.8 Contact Tip, E–Cu for Al.	LS 141.0002
	M6 X 25 X 1.0 Contact Tip, E–Cu for Al.	LS 141.0007
	M6 X 25 X 1.2 Contact Tip, E–Cu for Al.	–
	M6 X 25 X 0.6 Contact Tip, CuCrZr	LS 140.0855
	M6 X 25 X 0.8 Contact Tip, CuCrZr	LS 140.0062
	M6 X 25 X 1.0 Contact Tip, CuCrZr	LS 140.0256
5	Nozzle Spring	LS 002.0058
6	Gas Nozzle Holder	LS 002.0078
7	Swan Neck	LS 002.0009
8	Hexagon Nut M10x1	LS 001.0009
9	Nut	LS 400.0114
10	Plastic Nut	LS 400.0044
11	Handle	LS 180.0076
12	Switch	LS 185.0031
13	Switch Connector Collet	LS 175.A022
14	Cable Support	LS 500.0225
15	Cable Assembly (16mm^2), 3M	
	Cable Assembly (16mm^2), 4M	
	Cable Assembly (16mm^2), 5M	
16	Cable Support	LS 500.0225
17	Rear Handle	LS 501.2248
18	Adaptor Nut	LS 500.0213
19	Central Connector KZ–2	LS 501.0003
20	Nut M10 x 1	LS 501.0082
21	Insulated Liner, For wire Φ0.6–0.8,3.5M	LS 124.0011
	4.5M	LS 124.0012
	5.5M	LS 124.0015
	Insulated Liner, For wire Φ1.0–1.2,3.5M	LS 124.0026
	4.5M	LS 124.0031
	5.5M	LS 124.0035
	Teflon Liner, For wire Φ0.6–0.8,3.5M	LS 126.0005
	4.5M	LS 126.0008
	5.5M	LS 126.0011
	Teflon Liner, For wire Φ1.0–1.2,3.5M	LS 126.0021
	4.5M	LS 126.0026
	5.5M	LS 126.0028

MIG TORCH

LBI 24

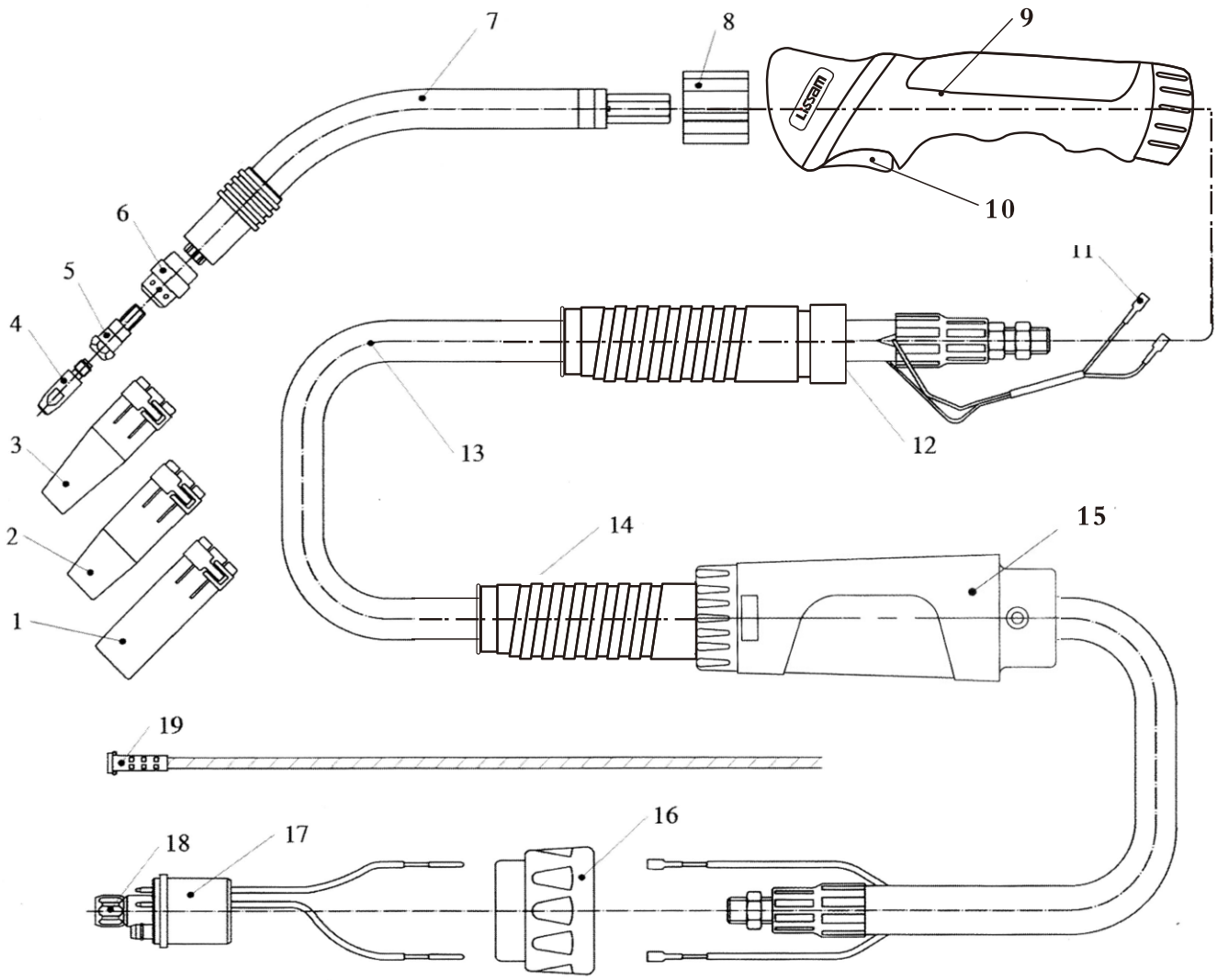

Technical Data

Rating	250A CO_2 220A Mixed Gases
Duty Cycle	60%
Wire Size	0.8–1.2mm

No.	Description	Part No.
	LBI 24 Complete Torch–3M	LS 012.0103
	LBI 24 Complete Torch–4M	LS 012.0104
	LBI 24 Complete Torch–5M	LS 012.0105
1	Cylindrical Nozzle Φ17mm	LS 145.0047
2	Conical Nozzle Φ12.5mm	LS 145.0080
3	Tapered Nozzle Φ10mm	LS 145.0128

ZHEJIANG LISSAM WELDING EQUIPMENT CO.,LTD
Http:// www.lissam.com E-mail: lissam@vip.163.com

No.	Description	Part No.
4	M6 X 28 X 0.8 Contact Tip, E–Cu	LS 140.0051
	M6 X 28 X 0.9 Contact Tip, E–Cu	LS 140.0169
	M6 X 28 X 1.0 Contact Tip, E–Cu	LS 140.0242
	M6 X 28 X 1.2 Contact Tip, E–Cu	LS 140.0379
	M6 X 28 X 0.8 Contact Tip, E–Cu for Al.	LS 141.0001
	M6 X 28 X 1.0 Contact Tip, E–Cu for Al.	LS 141.0006
	M6 X 28 X 1.2 Contact Tip, E–Cu for Al.	LS 141.0010
	M6 X 28 X 0.8 Contact Tip, CuCrZr	LS 140.0054
	M6 X 28 X 1.0 Contact Tip, CuCrZr	LS 140.0245
	M6 X 28 X 1.2 Contact Tip, CuCrZr	LS 140.0382
5	Contact Tip Holder	LS 142.0003
6	Gas Diffuser Standard	LS 012.0183
7	Swan Neck	LS 012.0001
8	Plastic Nut	LS 400.0044
9	Handle	LS 180.0076
10	Switch	LS 185.0031
11	Switch Connector Collet	LS 175.A022
12	Cable Support	LS 400.1010
13	Cable Assembly (25mm^2), 3M	
	Cable Assembly (25mm^2), 4M	
	Cable Assembly (25mm^2), 5M	
14	Cable Support	LS 400.1010
15	Rear Handle	LS 501.2248
16	Adaptor Nut	LS 500.0213
17	Central Connector KZ–2	LS 501.0003
18	Nut M10 x 1	LS 501.0082
19	Insulated Liner, For wire Φ0.8, 3.5M	LS 124.0011
	4.5M	LS 124.0012
	5.5M	LS 124.0015
	Insulated Liner, For wire Φ1.0–1.2, 3.5M	LS 124.0026
	4.5M	LS 124.0031
	5.5M	LS 124.0035
	Teflon Liner, For wire Φ 0.8, 3.5M	LS 126.0005
	4.5M	LS 126.0008
	5.5M	LS 126.0011
	Teflon Liner, For wire Φ1.0–1.2, 3.5M	LS 126.0021
	4.5M	LS 126.0026
	5.5M	LS 126.0028

MIG TORCH

LBI 25

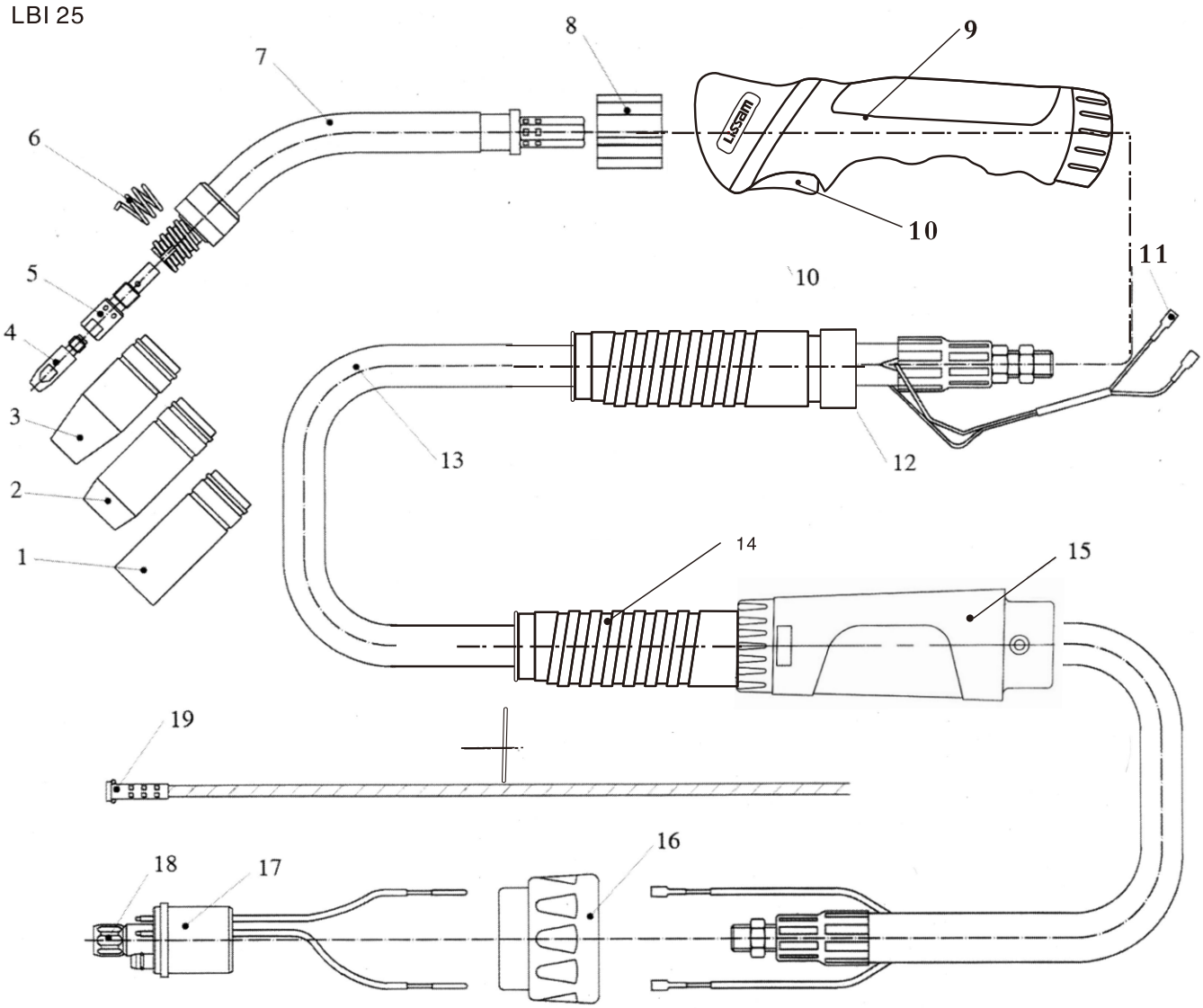

Technical Data

Rating	230A CO_2
	200A Mixed Gases
Duty Cycle	60%
Wire Size	0.8–1.2mm

No.	Description	Part No.
	LBI 25 Complete Torch–3M	LS 004.0312
	LBI 25 Complete Torch–4M	LS 004.0313
	LBI 25 Complete Torch–5M	LS 004.0314
1	Cylindrical Nozzle Φ18mm	LS 145.0042
2	Conical Nozzle Φ15mm	LS 145.0076
3	Tapered Nozzle Φ11.5mm	LS 145.0124

ZHEJIANG LISSAM WELDING EQUIPMENT CO.,LTD
Http:// www.lissam.com E-mail: lissam@vip.163.com

No.	Description	Part No.
4	M6 X 28 X 0.8 Contact Tip, E–Cu	LS 140.0051
	M6 X 28 X 0.9 Contact Tip, E–Cu	LS 140.0169
	M6 X 28 X 1.0 Contact Tip, E–Cu	LS 140.0242
	M6 X 28 X 1.2 Contact Tip, E–Cu	LS 140.0379
	M6 X 28 X 0.8 Contact Tip, E–Cu for Al.	LS 141.0001
	M6 X 28 X 1.0 Contact Tip, E–Cu for Al.	LS 141.0006
	M6 X 28 X 1.2 Contact Tip, E–Cu for Al.	LS 141.0010
	M6 X 28 X 0.8 Contact Tip, CuCrZr	LS 140.0054
	M6 X 28 X 1.0 Contact Tip, CuCrZr	LS 140.0245
	M6 X 28 X 1.2 Contact Tip, CuCrZr	LS 140.0382
5	Contact Tip Holder	LS 142.0001
6	Nozzle Spring	LS 003.0013
7	Swan Neck	LS 004.0012
8	Plastic Nut	LS 400.0044C
9	Handle	LS 180.0076
10	Switch	LS 185.0031
11	Switch Connector Collet	LS 175.A022
12	Cable Support	LS 400.1010
13	Cable Assembly (25mm^2), 3M	
	Cable Assembly (25mm^2), 4M	
	Cable Assembly (25mm^2), 5M	
14	Cable Support	LS 400.1010
15	Rear Handle	LS 501.2248
16	Adaptor Nut	LS 500.0213
17	Central Connector KZ–2	LS 501.0003
18	Nut M10 x 1	LS 501.0082
19	Insulated Liner, For wire Φ0.6–0.8,3.5M	LS 124.0011
	4.5M	LS 124.0012
	5.5M	LS 124.0015
	Insulated Liner, For wire Φ1.0–1.2,3.5M	LS 124.0026
	4.5M	LS 124.0031
	5.5M	LS 124.0035
	Teflon Liner, For wire Φ0.6–0.8,3.5M	LS 126.0005
	4.5M	LS 126.0008
	5.5M	LS 126.0011
	Teflon Liner, For wire Φ1.0–1.2,3.5M	LS 126.0021
	4.5M	LS 126.0026
	5.5M	LS 126.0028

MIG TORCH

LBI 26

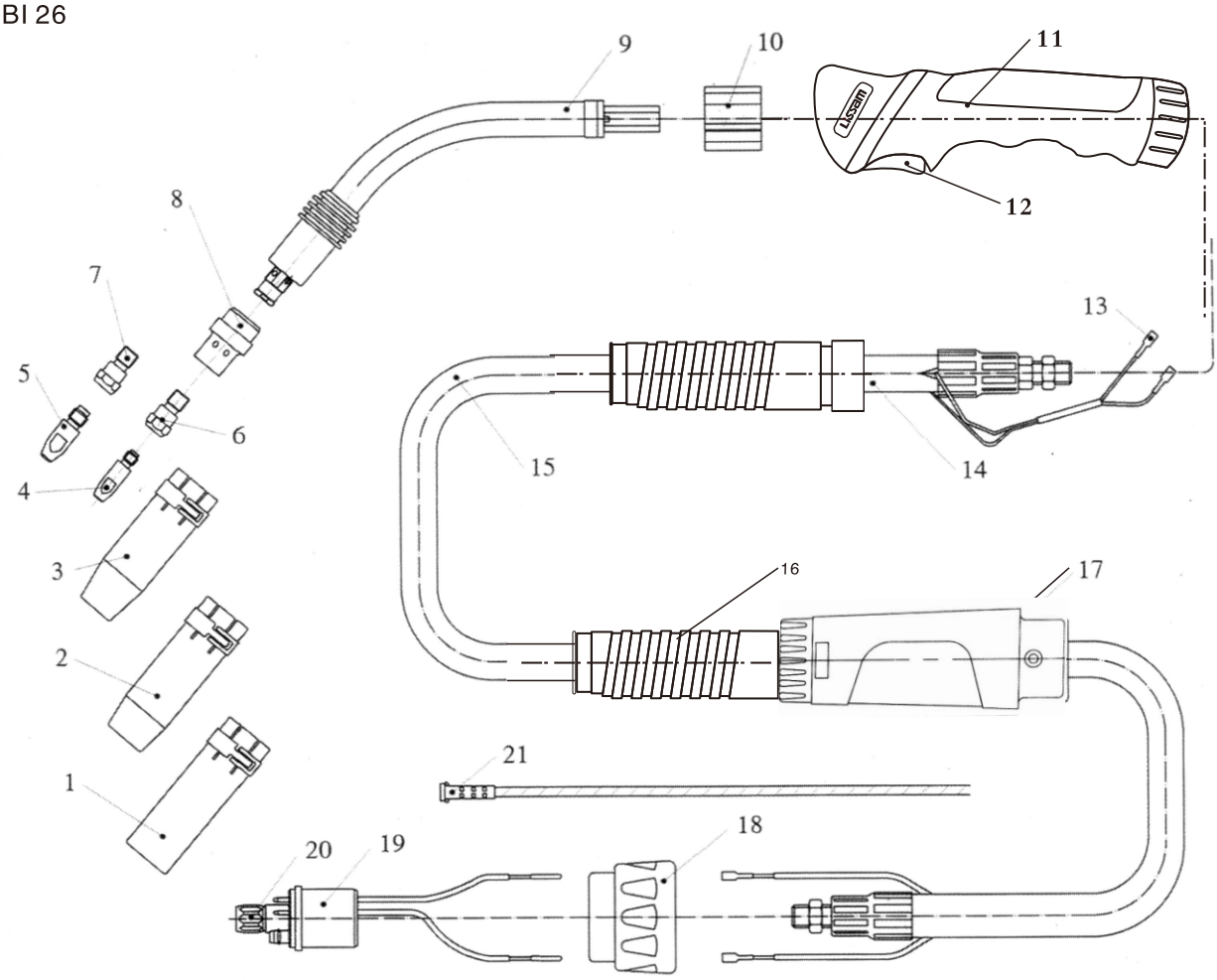

Technical Data

Rating	270A CO_2
	240A Mixed Gases
Duty Cycle	60%
Wire Size	0.8–1.2mm

No.	Description	Part No.
	LBI 26 Complete Torch–3M	LS 018.0062
	LBI 26 Complete Torch–4M	LS 018.0063
	LBI 26 Complete Torch–5M	LS 018.0064
1	Cylindrical Nozzle Φ20mm	LS 145.0051
2	Conical Nozzle Φ16mm	LS 145.0085
3	Tapered Nozzle Φ14mm	LS 145.0132
4	M6 X 28 X 0.8 Contact Tip, E–Cu	LS 140.0051
	M6 X 28 X 0.9 Contact Tip, E–Cu	LS 140.0169
	M6 X 28 X 1.0 Contact Tip, E–Cu	LS 140.0242
	M6 X 28 X 1.2 Contact Tip, E–Cu	LS 140.0379
	M6 X 28 X 0.8 Contact Tip, E–Cu for Al.	LS 141.0001

ZHEJIANG LISSAM WELDING EQUIPMENT CO.,LTD
Http:// www.lissam.com E–mail: lissam@vip.163.com

No.	Description	Part No.
4	M6 X 28 X 1.0 Contact Tip, E–Cu for Al.	LS 141.0006
	M6 X 28 X 1.2 Contact Tip, E–Cu for Al.	LS 141.0010
	M6 X 28 X 0.8 Contact Tip, CuCrZr	LS 140.0054
	M6 X 28 X 1.0 Contact Tip, CuCrZr	LS 140.0245
	M6 X 28 X 1.2 Contact Tip, CuCrZr	LS 140.0382
5	M8 X 30 X 0.8 Contact Tip,E–Cu	LS 140.0114
	M8 X 30 X 1.0 Contact Tip,E–Cu	LS 140.0313
	M8 X 30 X 1.2 Contact Tip,E–Cu	LS 140.0442
	M8 X 30 X 0.8 Contact Tip,E–Cu for Al.	LS 141.0003
	M8 X 30 X 1.0 Contact Tip,E–Cu for Al.	LS 141.0008
	M8 X 30 X 1.2 Contact Tip,E–Cu for Al.	LS 141.0015
	M8 X 30 X 0.8 Contact Tip, CuCrZr	LS 140.0117
	M8 X 30 X 1.0 Contact Tip, CuCrZr	LS 140.0316
	M8 X 30 X 1.2 Contact Tip, CuCrZr	LS 140.0445
6	Contact Tip Holder M6 X22	LS 142.0007
	M6 X25	LS 142.0012
7	Contact Tip Holder M8 X22	LS 142.0082
	M8X25	LS 142.0026
8	Gas Diffuser Standard	LS 018.0116
	Ceramic	LS 018.0141
9	Swan Neck	LS 018.0001
10	Plastic Nut	LS 400.0044
11	Handle	LS 180.0076
12	Switch	LS 185.0031
13	Switch Connector Collet	LS 175.A022
14	Cable Support	LS 400.1010
15	Cable Assembly (25mm^2), 3M	
	Cable Assembly (25mm^2), 4M	
	Cable Assembly (25mm^2), 5M	
16	Cable Support	LS 400.1010
17	Rear Handle	LS 501.2248
18	Adaptor Nut	LS 500.0213
19	Central Connector KZ–2	LS 501.0003
20	Nut M10 x 1	LS 501.0082
21	Insulated Liner, For wire Φ0.8, 3.5M	LS 124.0011
	4.5M	LS 124.0012
	5.5M	LS 124.0015
	Insulated Liner, For wire Φ1.0–1.2, 3.5M	LS 124.0026
	4.5M	LS 124.0031
	5.5M	LS 124.0035
	Teflon Liner, For wire Φ 0.8, 3.5M	LS 126.0005
	4.5M	LS 126.0008
	5.5M	LS 126.0011
	Teflon Liner, For wire Φ1.0–1.2, 3.5M	LS 126.0021
	4.5M	LS 126.0026
	5.5M	LS 126.0028

MIG TORCH

LBI 36

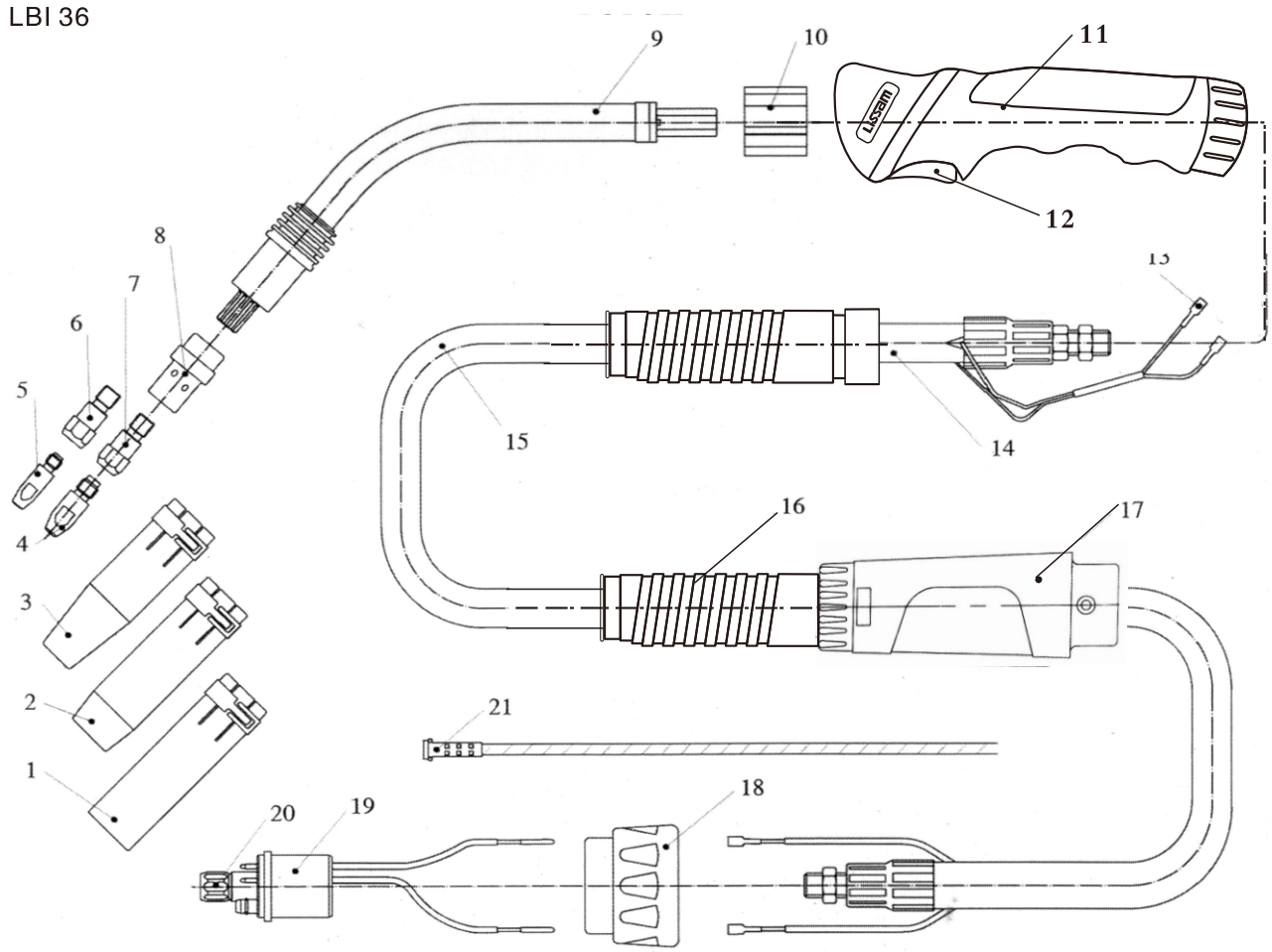

Technical Data

Rating	340A CO_2
	320A Mixed Gases
Duty Cycle	60%
Wire Size	0.8–1.2mm

No.	Description	Part No.
	LBI 36 Complete Torch–3M	LS 014.0143
	LBI 36 Complete Torch–4M	LS 014.0144
	LBI 36 Complete Torch–5M	LS 014.0145
1	Cylindrical Nozzle Φ19mm	LS 145.0045
2	Conical Nozzle Φ16mm	LS 145.0078
3	Tapered Nozzle Φ12mm	LS 145.0126
4	M6 X 28 X 0.8 Contact Tip, E–Cu	LS 140.0051
	M6 X 28 X 0.9 Contact Tip, E–Cu	LS 140.0169
	M6 X 28 X 1.0 Contact Tip, E–Cu	LS 140.0242
	M6 X 28 X 1.2 Contact Tip, E–Cu	LS 140.0379
	M6 X 28 X 0.8 Contact Tip, E–Cu for Al.	LS 141.0001
	M6 X 28 X 1.0 Contact Tip, E–Cu for Al.	LS 141.0006
	M6 X 28 X 1.2 Contact Tip, E–Cu for Al.	LS 141.0010

ZHEJIANG LISSAM WELDING EQUIPMENT CO.,LTD
Http:// www.lissam.com E–mail: lissam@vip.163.com

No.	Description	Part No.
	M6 X 28 X 0.8 Contact Tip, CuCrZr	LS 140.0054
	M6 X 28 X 1.0 Contact Tip, CuCrZr	LS 140.0245
	M6 X 28 X 1.2 Contact Tip, CuCrZr	LS 140.0382
5	M8 X 30 X 0.8 Contact Tip,E–Cu	LS 140.0114
	M8 X 30 X 1.0 Contact Tip,E–Cu	LS 140.0313
	M8 X 30 X 1.2 Contact Tip,E–Cu	LS 140.0442
	M8 X 30 X 0.8 Contact Tip,E–Cu for Al.	LS 141.0003
	M8 X 30 X 1.0 Contact Tip,E–Cu for Al.	LS 141.0008
	M8 X 30 X 1.2 Contact Tip,E–Cu for Al.	LS 141.0015
	M8 X 30 X 0.8 Contact Tip, CuCrZr	LS 140.0117
	M8 X 30 X 1.0 Contact Tip, CuCrZr	LS 140.0316
	M8 X 30 X 1.2 Contact Tip, CuCrZr	LS 140.0445
6	Contact Tip Holder M6 X25	
	M6 X28	LS 142.0005
	M6 X32	LS 142.0011
7	Contact Tip Holder M8 X25	
	M8 X28	LS 142.0020
	M8 X34	LS 142.0024
8	Gas Diffuser Standard	LS 014.0261
	Long life	LS 014.0026
	Ceramic	LS 014.0023
9	Swan Neck	LS 998.0091
10	Plastic Nut	LS 400.0044
11	Handle	LS 180.0076
12	Switch	LS 185.0031
13	Switch Connector Collet	LS 175.A022
14	Cable Support	LS 400.1010
15	Cable Assembly (37mm^2),3M	
	Cable Assembly (37mm^2),4M	
	Cable Assembly (37mm^2),5M	
16	Cable Support	LS 400.1010
17	Rear Handle	LS 501.2248
18	Adaptor Nut	LS 500.0213
19	Central Connector KZ–2	LS 501.0003
20	Nut M10 x 1	LS 501.0082
21	Insulated Liner, For wire Φ0.8, 3.5M	LS 124.0011
	4.5M	LS 124.0012
	5.5M	LS 124.0015
	Insulated Liner, For wire Φ1.0–1.2, 3.5M	LS 124.0026
	4.5M	LS 124.0031
	5.5M	LS 124.0035
	Teflon Liner, For wire Φ 0.8, 3.5M	LS 126.0005
	4.5M	LS 126.0008
	5.5M	LS 126.0011
	Teflon Liner, For wire Φ1.0–1.2, 3.5M	LS 126.0021
	4.5M	LS 126.0026
	5.5M	LS 126.0028

MIG TORCH

LBI 40

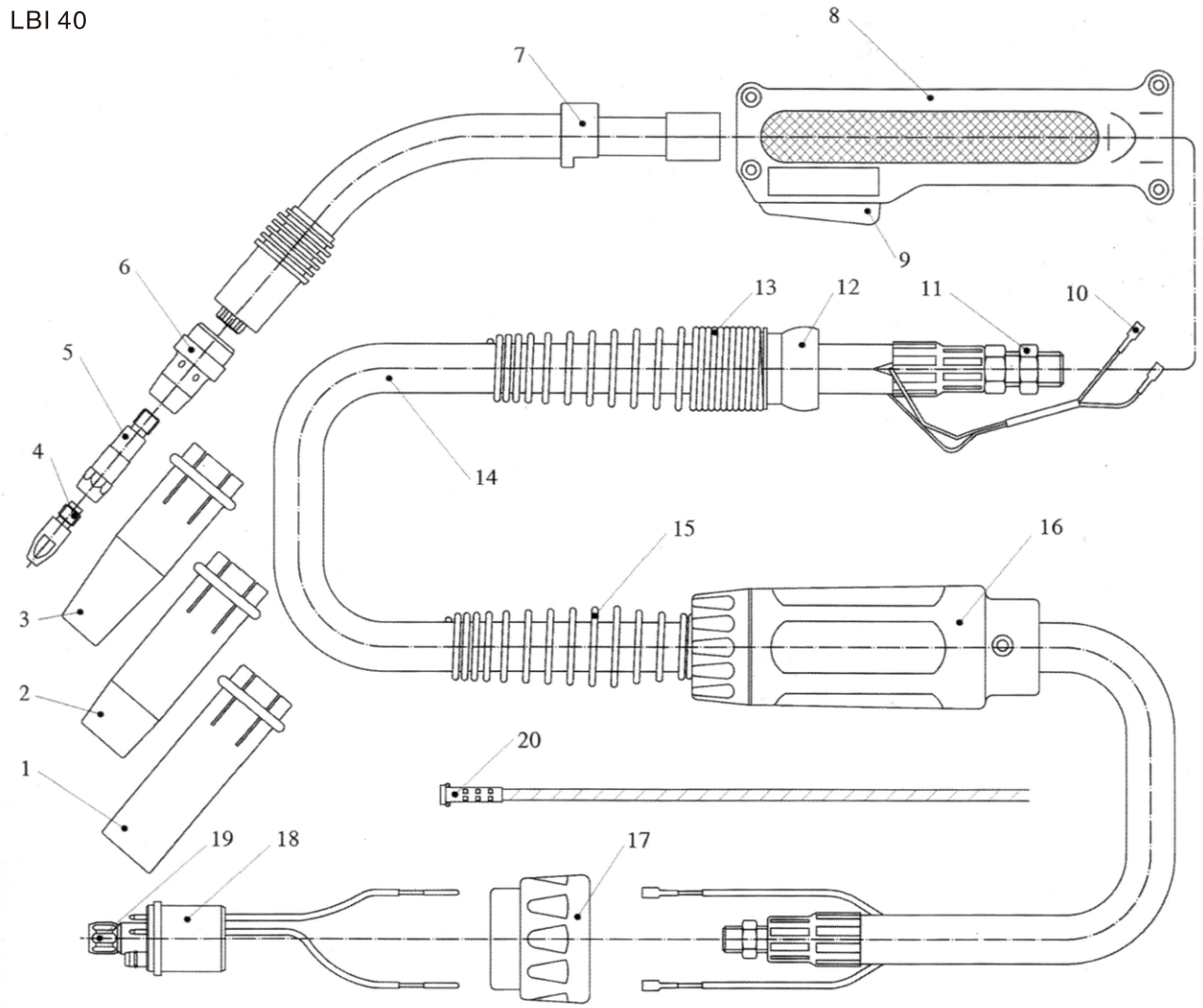

Technical Data

Rating	380A CO_2 360A Mixed Gases
Duty Cycle	60%
Wire Size	1.0–2.4mm

No.	Description	Part No.
	LBI 40 Complete Torch–3M	LS 015.0029
	LBI 40 Complete Torch–4M	LS 015.0032
	LBI 40 Complete Torch–5M	LS 015.0034
1	Cylindrical Nozzle Φ21mm	LS 145.0046
2	Conical Nozzle Φ18mm	LS 145.0079
3	Tapered Nozzle Φ14mm	LS 145.0127

ZHEJIANG LISSAM WELDING EQUIPMENT CO.,LTD
Http:// www.lissam.com E-mail: lissam@vip.163.com

No.	Description	Part No.
4	M8 × 30 × 1.0 Contact Tip, E–cu	LS 140.0313
	M8 × 30 × 1.2 Contact Tip, E–cu	LS 140.0442
	M8 × 30 × 1.6 Contact Tip, E–cu	LS 140.0587
	M8 × 30 × 1.0 Contact Tip, CuCrZr	LS 140.0316
	M8 × 30 × 1.2 Contact Tip, CuCrZr	LS 140.0445
	M8 × 30 × 1.6 Contact Tip, CuCrZr	LS 140.0590
	M8 × 30 × 2.0 Contact Tip, CuCrZr	LS 140.0656
	M8 × 30 × 2.4 Contact Tip, CuCrZr	LS 140.0679
5	Contact Tip Holder, M8 × 43	LS 142.0021
6	Gas Diffuser	LS 015.0021
7	Swan Neck	LS 015.0001
8	Handle	LS 180.0029
9	Switch	
10	Switch Connector Collet	LS 175.0049
11	Hexagon Nut	LS 500.0085
12	Ball Joint	
13	Cable Support Spring	
14	Cable Assembly(50mm^2), 3M	
	Cable Assembly(50mm^2), 4M	
	Cable Assembly(50mm^2), 5M	
15	Back Cable Support Spring	
16	Rear Handle	LS 501.2379
17	Adaptor Nut	LS 500.0213
18	Central Connector KZ–2	LS 501.0020
19	Nut M10 × 1	LS 501.0082
20	Insulated Liner, For wire Φ0.8, 3.5M	LS 124.0011
	4.5M	LS 124.0012
	5.5M	LS 124.0015
	Insulated Liner, For wire Φ1.0–1.2, 3.5M	LS 124.0026
	4.5M	LS 124.0031
	5.5M	LS 124.0035
	Teflon Liner, For wire Φ 0.8, 3.5M	LS 126.0005
	4.5M	LS 126.0008
	5.5M	LS 126.0011
	Teflon Liner, For wire Φ1.0–1.2, 3.5M	LS 126.0021
	4.5M	LS 126.0026
	5.5M	LS 126.0028

MIG TORCH

LBI 501D

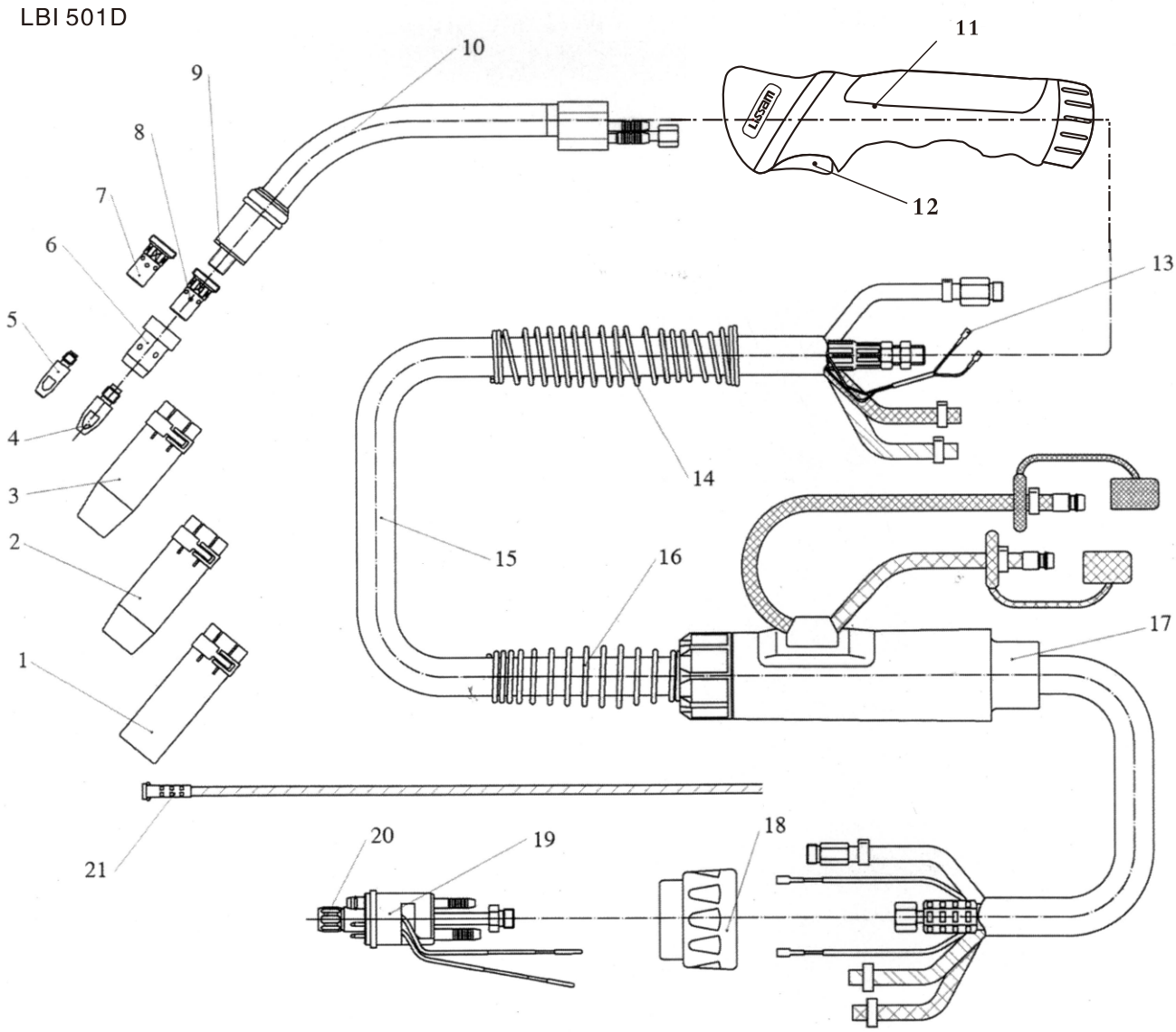

Technical Data

Rating	500A CO_2 450A Mixed Gases
Duty Cycle	100%
Wire Size	1.0–1.6mm

No.	Description	Part No.
	LBI 501D Complete Torch–3M	LS 034.0160
	LBI 501D Complete Torch–4M	LS 034.0161
	LBI 501D Complete Torch–5M	LS 034.0162
1	Cylindrical Nozzle Φ20mm	LS 145.0051
2	Conical Nozzle Φ16mm	LS 145.0085
3	Tapered Nozzle Φ14mm	LS 145.0132

ZHEJIANG LISSAM WELDING EQUIPMENT CO.,LTD
Http:// www.lissam.com E-mail: lissam@vip.163.com

No.	Description	Part No.
4	M6 X 28 X 0.8 Contact Tip, E–Cu	LS 140.0051
	M6 X 28 X 0.9 Contact Tip, E–Cu	LS 140.0169
	M6 X 28 X 1.0 Contact Tip, E–Cu	LS 140.0242
	M6 X 28 X 1.2 Contact Tip, E–Cu	LS 140.0379
	M6 X 28 X 1.6 Contact Tip, E–Cu	LS 140.0555
	M6 X 28 X 0.8 Contact Tip, E–Cu for Al.	LS 141.0001
	M6 X 28 X 1.0 Contact Tip, E–Cu for Al.	LS 141.0006
	M6 X 28 X 1.2 Contact Tip, E–Cu for Al.	LS 141.0010
	M6 X 28 X 0.8 Contact Tip, CuCrZr	LS 140.0054
	M6 X 28 X 1.0 Contact Tip, CuCrZr	LS 140.0245
		LS
5	M8 X 30 X 0.8 Contact Tip,E–Cu	LS 140.0114
	M8 X 30 X 1.0 Contact Tip,E–Cu	LS 140.0313
	M8 X 30 X 1.2 Contact Tip,E–Cu	LS 140.0442
	M8 X 30 X 0.8 Contact Tip,E–Cu for Al.	LS 141.0003
	M8 X 30 X 1.0 Contact Tip,E–Cu for Al.	LS 141.0008
	M8 X 30 X 1.2 Contact Tip,E–Cu for Al.	LS 141.0015
	M8 X 30 X 0.8 Contact Tip, CuCrZr	LS 140.0117
	M8 X 30 X 1.0 Contact Tip, CuCrZr	LS 140.0316
	M8 X 30 X 1.2 Contact Tip, CuCrZr	LS 140.0445
	M8 X 30 X 1.6 Contact Tip, CuCrZr	LS 140.0590
	M8 X 30 X 2.4 Contact Tip, CuCrZr	LS 140.0679
6	Gas Diffuser Standard	LS 030.0145
	Long life	LS 030.0037
	Ceramic	LS 030.0190
7	Contact Tip Holder M6 × 25	LS 142.0008
	M6 × 29	LS 142.0013
8	Contact Tip Holder M8 × 25	LS 142.0022
	M8 × 29	LS 142.0027
9	Insulator	LS 030.0019
10	Swan Neck	LS 034.0001
11	Handle	–
12	Switch	LS 185.0031
13	Switch Connector Collet	LS 175.0022
14	Ball Joint Cable Support	–
15	Cable Assembly (16mm^2) , 3M	
	Cable Assembly (16mm^2) , 4M	LS 500.0225
	Cable Assembly (16mm^2) , 5M	LS 501.2248
16	Back Cable Support Spring	
17	Rear Handle	LS 501.2379
18	Adaptor Nut	LS 500.0213
19	Central Connector WZ–2	LS 501.0015
20	Nut M10 × 1	LS 500.0082
21	Steel Liner, For wire Φ0.8, 3.5M	LS 122.0005
	4.5M	LS 122.0007
	5.5M	LS 122.0009
	Steel Liner, For wire Φ1.0–1.2, 3.5M	LS 122.0031
	4.5M	LS 122.0036
	5.5M	LS 122.3939
	Steel Liner, For wire Φ1.6, 3.5M	LS 122.0056
	4.5M	LS 122.0060
	5.5M	LS 122.0063

MIG TORCH

LOX 235

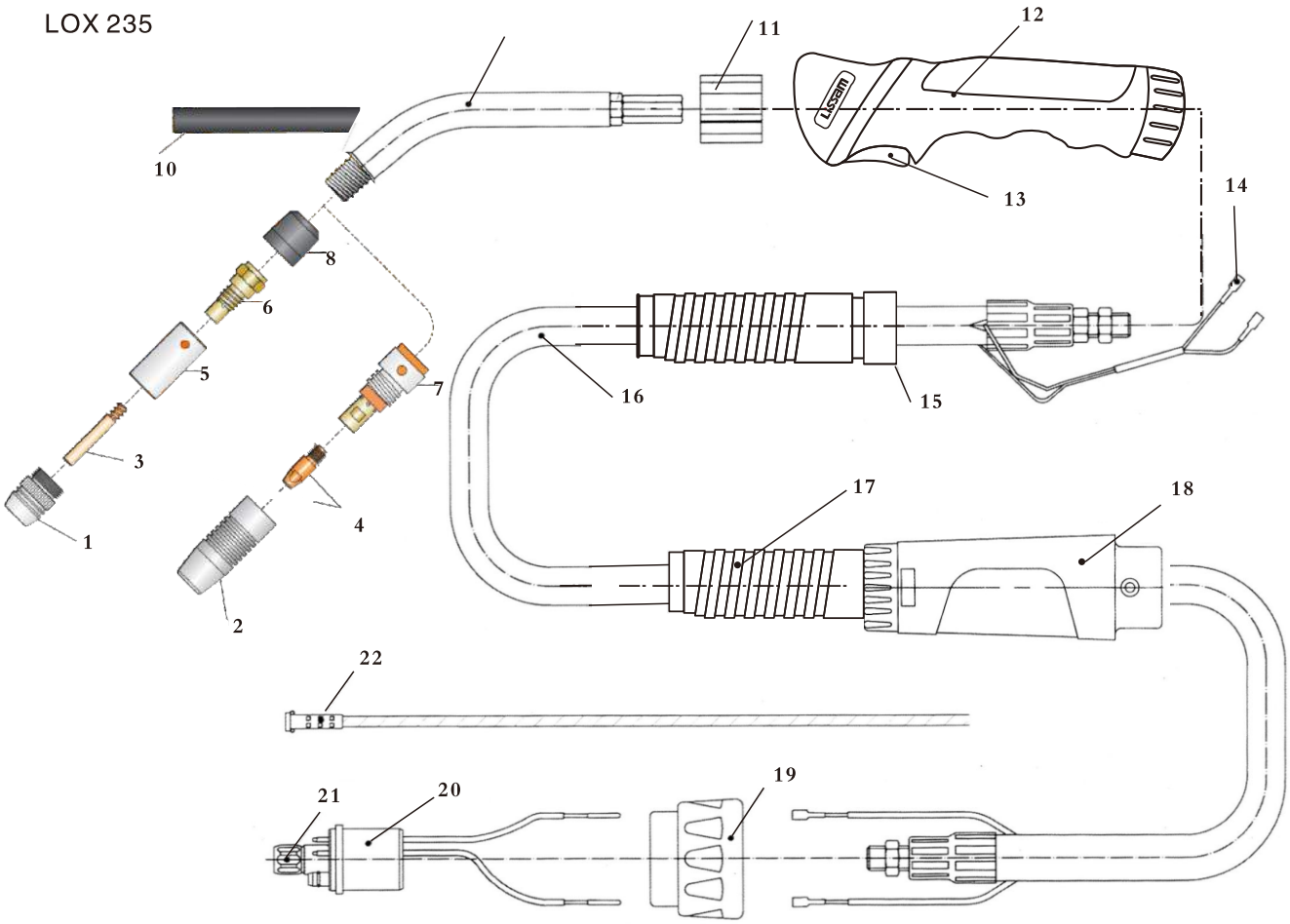

Technical Data

Rating	300A CO_2 260A Mixed Gases
Duty Cycle	60%
Wire Size	0.8–1.2mm

No.	Description	Part No.
	LOX 235 Complete Torch–3M	LOX 223
	LOX 235 Complete Torch–4M	LOX 224
	LOX 235 Complete Torch–5M	LOX 225
1	Gas Nozzle Φ15mm (35mm)	ME 514
	Gas Nozzle Φ15mm (35mm)	ME 522
2	Gas Nozzle Φ13mm (65mm)	ME 517
	Gas Nozzle Φ16mm (65mm)	ME 516
3	Gas Nozzle Φ19mm (65mm)	ME 512
	Contact Tip, W5/16" X 55 X 0.8	MA 050
	Contact Tip, W5/16" X 55 X 0.9	MA 051
	Contact Tip, W5/16" X 55 X 1.0	MA 052

ZHEJIANG LISSAM WELDING EQUIPMENT CO.,LTD
Http:// www.lissam.com E-mail: lissam@vip.163.com

No.	Description	Part No.
4	Contact Tip, W5/16" X 55 X 1.2	MA 053
	Contact Tip, M8 X 30 X 0.8	MA 060
	Contact Tip, M8 X 30 X 0.9	MA 061
	Contact Tip, M8 X 30 X 1.0	MA 062
	Contact Tip, M8 X 30 X 1.2	MA 063
5	Gas Nozzle Supporter	MD 490
6	Gas Nozzle Holder	MB 405
7	Gas Nozzle Holder	MB 406
8		MC 443
9	Swan Neck	LS 574
10	Swan Neck Cover	LS 446
11	Plastic Nut	LS 622
12	Handle	LS 180.0076
13	Switch	LS 185.0031
14	Switch Connector Collet	LS 175.A022
15	Cable Support	LS 400.1010
16	Cable Assembly (35mm^2) 3M	–
	Cable Assembly (35mm^2) 4M	MM727
	Cable Assembly (35mm^2) 5M	MM728
17	Cable Support	LS 400.1010
18	Rear Handle	LS 501.2248
19	Adaptor Nut	MN 761
20	Central Connector KZ–2	MO 770
20	Nut M10 x 1	MN 762
21	Insulated liner, 0.8–1.0mm, 3m	MP 800
	Insulated liner, 0.8–1.0mm, 4m	MP 801
	Insulated liner, 0.8–1.0mm, 5m	MP 802
	Insulated liner, 1.2mm, 3m	MP 803
	Insulated liner, 1.2mm, 4m	MP 804
	Insulated liner, 1.2mm, 5m	MP 805

MIG TORCH

LOX 450

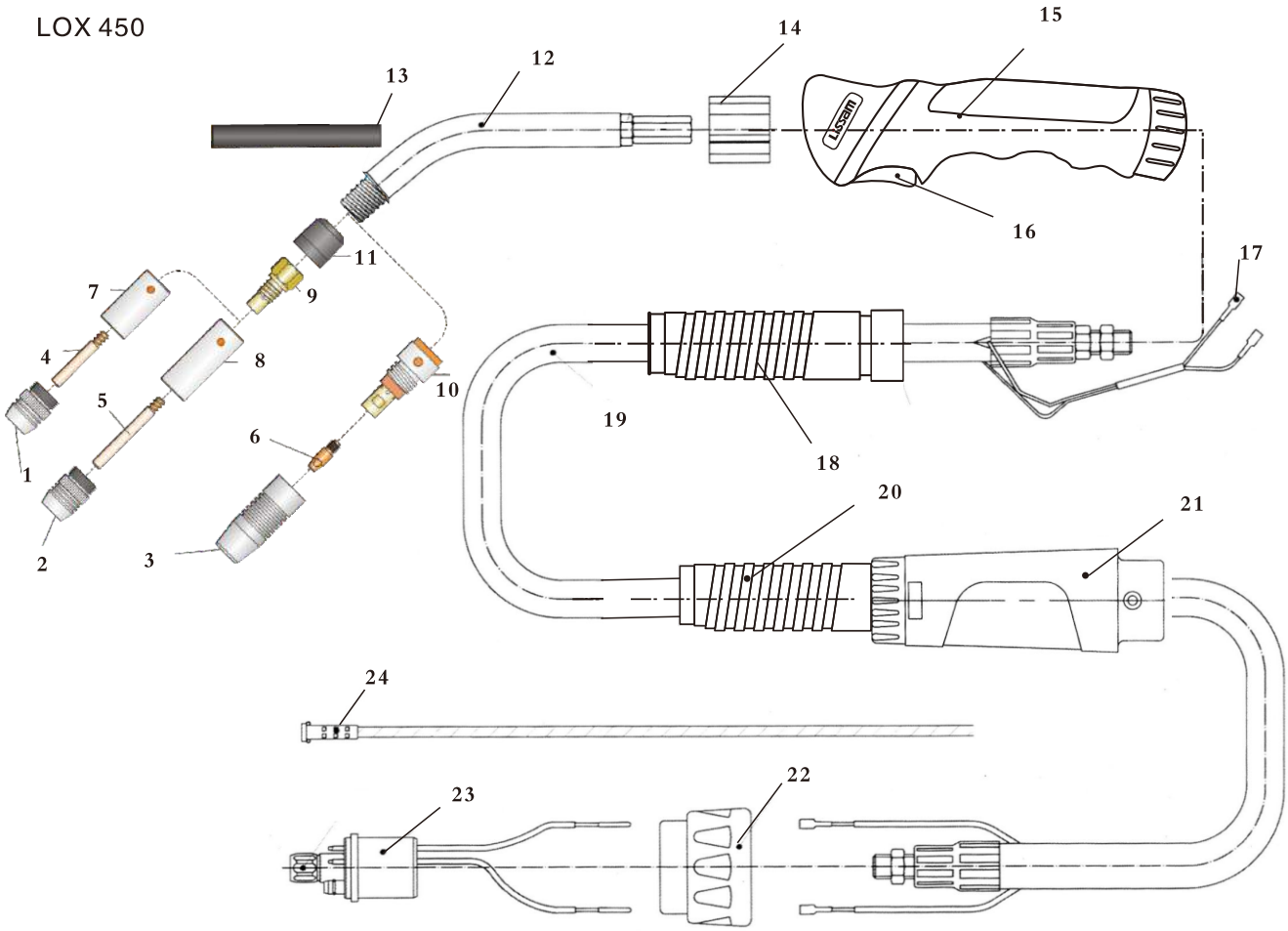

Technical Data

Rating	300A CO_2 260A Mixed Gases
Duty Cycle	60%
Wire Size	0.8–1.2mm

No.	Description	Part No.
	LOX 450 Complete Torch–3M	LOX 233
	LOX 450 Complete Torch–4M	LOX 234
	LOX 450 Complete Torch–5M	LOX 235
1	Gas Nozzle Φ15mm (38mm)	ME 534
	Gas Nozzle Φ19mm (38mm)	ME 515
2	Gas Nozzle Φ15mm (35mm)	ME 514
	Gas Nozzle Φ19mm (35mm)	ME 521
3	Gas Nozzle Φ13mm (65mm)	ME 517
	Gas Nozzle Φ16mm (65mm)	ME 516
	Gas Nozzle Φ19mm (65mm)	ME 512

ZHEJIANG LISSAM WELDING EQUIPMENT CO.,LTD
Http:// www.lissam.com E-mail: lissam@vip.163.com

No.	Description	Part No.
4	Contact Tip, W5/16” X 55 X 0.8	MA 050
	Contact Tip, W5/16” X 55 X 0.9	MA 051
	Contact Tip, W5/16” X 55 X 1.0	MA 052
	Contact Tip, W5/16” X 55 X 1.2	MA 053
	Contact Tip, W5/16” X 55 X 1.6	MA 054
5	Contact Tip, W5/16” X 73 X 0.8	MA 040
	Contact Tip, W5/16” X 73 X 0.9	MA 041
	Contact Tip, W5/16” X 73 X 1.0	MA 042
	Contact Tip, W5/16” X 73 X 1.2	MA 043
	Contact Tip, W5/16” X 73 X 1.6	MA 044
6	Contact Tip, M8 X 30 X 0.8	MA 060
	Contact Tip, M8 X 30 X 0.9	MA 061
	Contact Tip, M8 X 30 X 1.0	MA 062
	Contact Tip, M8 X 30 X 1.2	MA 063
	Contact Tip, M8 X 30 X 1.6	MA 064
7	Gas Nozzle Supporter	MD 491
8	Gas Nozzle Supporter	MD 490
9	Gas Nozzle Holder, W5/16”	MB 405
10	Gas Nozzle Holder, M8	MB 406
11	Insulator	MC 443
12	Swan Neck	LS 574
13	Swan Neck Cover	LS 446
14	Plastic Nut	LS 622
15	Handle	LS 180.0076
16	Switch	LS 185.0031
17	Switch Connector Collet	LS 175.A022
18	Cable Support	LS 500.0225
19	Cable Assembly (50mm^2) 3M	–
	Cable Assembly (50mm^2) 4M	MM730
	Cable Assembly (50mm^2) 5M	MM731
20	Cable Support	LS 500.0225
21	Rear Handle	LS 501.2248
22	Adaptor Nut	MN 761
23	Central Connector KZ–2	MO 770
24	Nut M10 x 1	MN 762
25	Insulated liner, 0.8–1.0mm, 3m	MP 800
	Insulated liner, 0.8–1.0mm, 4m	MP 801
	Insulated liner, 0.8–1.0mm, 5m	MP 802
	Insulated liner, 1.2mm, 3m	MP 803
	Insulated liner, 1.2mm, 4m	MP 804
	Insulated liner, 1.2mm, 5m	MP 805
	Insulated liner, 1.6mm, 3m	MP 806
	Insulated liner, 1.6mm, 4m	MP 807
	Insulated liner, 1.6mm, 5m	MP 808
	Teflon liner, 1.2mm, 3m	MP 814
	Teflon liner, 1.2mm, 4m	MP 900
	Teflon liner, 1.2mm, 5m	MP 901

MIG TORCH

LPA 200A

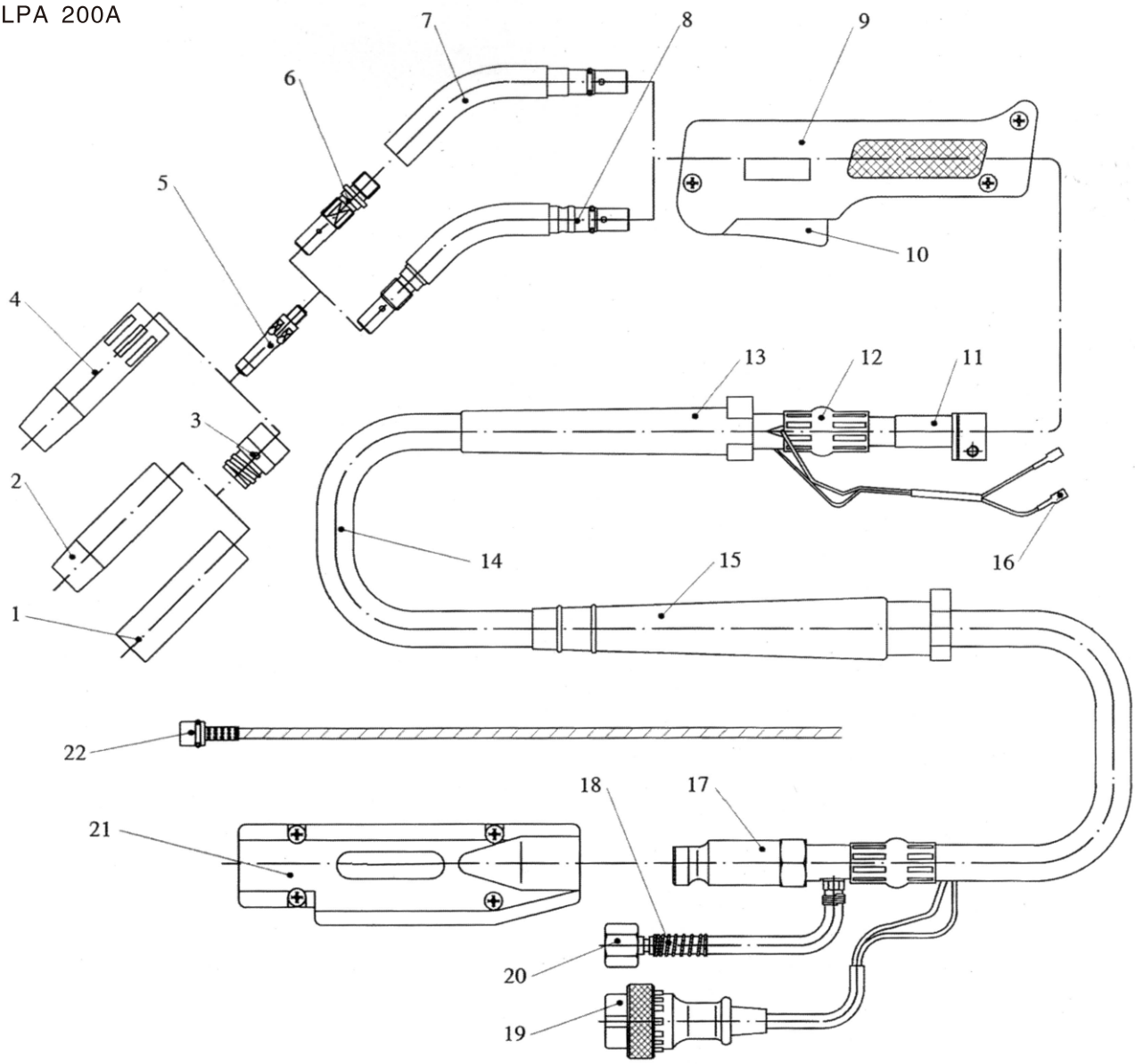

Technical Data

Rating	200A CO_2 160A Mixed Gases
Duty Cycle	60%
Wire Size	0.8–1.2mm

No.	Description	Part No.
	LPA 200 Complete Torch–3M	YT–20CS3
	LPA 200 Complete Torch–4M	
	LPA 200 Complete Torch–5M	
1	Cylindrical Nozzle Φ15mm	
2	Conical Nozzle Φ13mm	
3	Insulator	

ZHEJIANG LISSAM WELDING EQUIPMENT CO.,LTD
Http:// www.lissam.com E–mail: lissam@vip.163.com

No.	Description	Part No.
4	Self–insulated Nozzle Φ13mm	TGN01208
5	M6 X 45 X 0.8 Contact Tip, E–Cu	
	M6 X 45 X 0.9 Contact Tip, E–Cu	
	M6 X 45 X 1.0 Contact Tip, E–Cu	
	M6 X 45 X 1.2 Contact Tip, E–Cu	
	M6 X 45 X 0.8 Contact Tip, CuCrZr	TET00841
	M6 X 45 X 0.9 Contact Tip, CuCrZr	TET00958
	M6 X 45 X 1.0 Contact Tip, CuCrZr	TET01054
	M6 X 45 X 1.2 Contact Tip, CuCrZr	TET01266
6	Contact Tip Holder	
7	Swan Neck Separable	
8	Swan Neck	TCU20111
9	Handle	
10	Switch	
11	Swan Neck Holder	
12	Clamp	
13	Front Cable Support	
14	Cable Assembly (18mm^2), 3M/4M/5M	
15	Back Cable Support	
16	Switch Connector Collet	
17	Cable Connector Rear	
18	Gas Inlet Adaptor Assemble	
19	Control Lead Plug	
20	Nut 9/16–18” UNF	
21	Cable Support Machine Side	
22	Steel Liner, For wire Φ0.8–1.0,3.5M	
	Steel Liner, For wire Φ0.8–1.0,4.5M	
	Steel Liner, For wire Φ0.8–1.0,5.5M	

MIG TORCH

LPA 350A

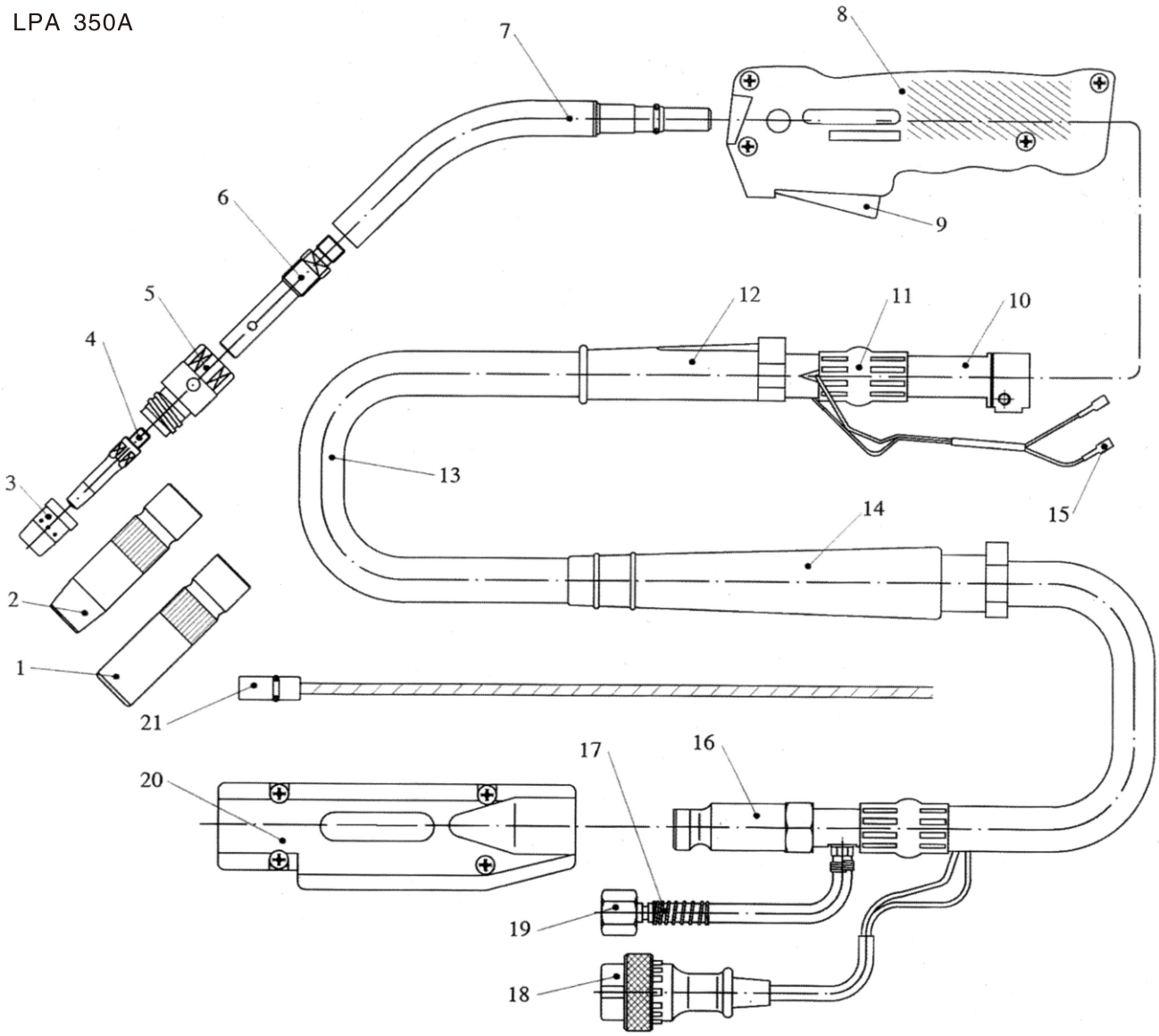

Technical Data

Rating	350A CO_2 300A Mixed Gases
Duty Cycle	60%
Wire Size	0.9–1.2mm

No.	Description	Part No.
	LPA 350 Complete Torch–3M	YT–35CS3
	LPA 350 Complete Torch–4M	YT–35CSM3
	LPA 350 Complete Torch–5M	YT–35CSL3
1	Cylindrical Nozzle Φ15mm	TGN01610
2	Conical Nozzle Φ11.5mm	
3	Gas Diffuser	TGR01001

ZHEJIANG LISSAM WELDING EQUIPMENT CO.,LTD
Http:// www.lissam.com E–mail: lissam@vip.163.com

No.	Description	Part No.
4	M6 X 45 X 0.9 Contact Tip, E–Cu	TET00958
	M6 X 45 X 1.0 Contact Tip, E–Cu	TET01054
	M6 X 45 X 1.2 Contact Tip, E–Cu	TET01266
	M6 X 45 X 0.9 Contact Tip, CuCrZr	
	M6 X 45 X 1.0 Contact Tip, CuCrZr	
	M6 X 45 X 1.2 Contact Tip, CuCrZr	
5	Insulator	TFZ35101
6	Contact Tip Holder, E–Cu	
	Contact Tip Holder, Brass	
7	Swan Neck	
8	Handle	
9	Switch	
10	Swan Neck Holder	
11	Clamp	
12	Front Cable Support	
13	Cable Assembly (37mm^2), 3M/4M/5M	
14	Back Cable Support	
15	Switch Connector Collet	
16	Cable Connector Rear	
17	Gas Inlet Adaptor Assemble	
18	Control Lead Plug	
19	Nut 9/16–18” UNF	
20	Cable Support Machine Side	
21	Steel Liner, For wire Φ0.8–1.0,3.5M	
22	Steel Liner, For wire Φ0.8–1.0,4.5M	TDT00058
	Steel Liner, For wire Φ0.8–1.0,5.5M	

MIG TORCH

LPA 500A

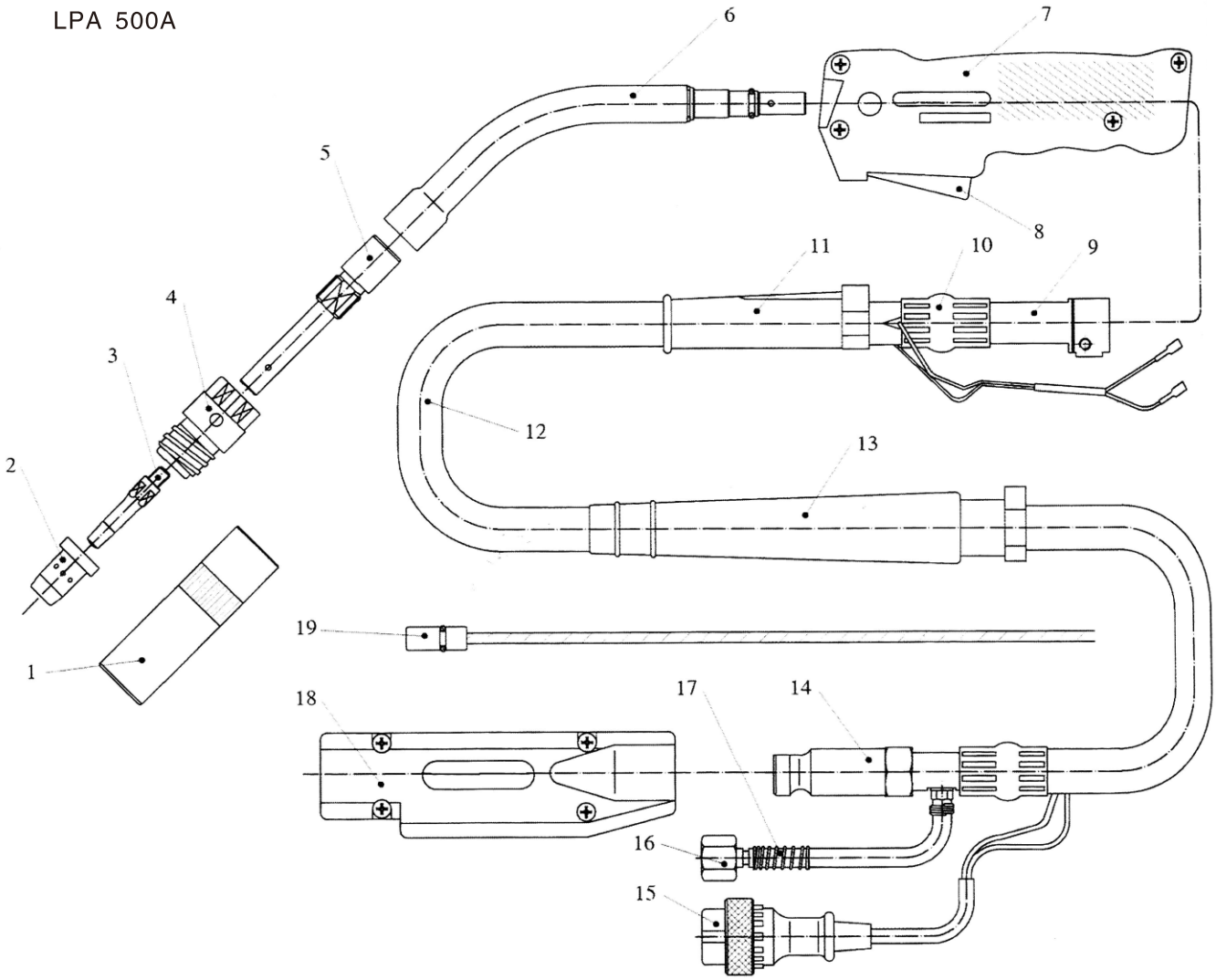

Technical Data

Rating	500A CO_2 420A Mixed Gases
Duty Cycle	60%
Wire Size	1.2–1.6mm

No.	Description	Part No.
	LPA 500 Complete Torch–3M	YT–50CS3
	LPA 500 Complete Torch–4M	YT–50CSM3
	LPA 500 Complete Torch–5M	YT–50CSL3
1	Cylindrical Nozzle Φ19mm	TGN00014
2	Gas Diffuser	TGR00902
3	M6 X 45 X 1.2 Contact Tip, E–Cu	TET01266

ZHEJIANG LISSAM WELDING EQUIPMENT CO.,LTD
Http:// www.lissam.com E–mail: lissam@vip.163.com

No.	Description	Part No.
	M6 X 45 X 1.4 Contact Tip, E–Cu	TET01433
	M6 X 45 X 1.6 Contact Tip, E–Cu	TET01676
	M6 X 45 X 1.2 Contact Tip, CuCrZr	
	M6 X 45 X 1.4 Contact Tip, CuCrZr	
	M6 X 45 X 1.6 Contact Tip, CuCrZr	
4	Insulator	TFZ50107
5	Contact Tip Holder, E–Cu	
	Contact Tip Holder, Brass	
6	Swan Neck	
7	Handle	
8	Switch	
9	Swan Neck Holder	
10	Clamp	
11	Front Cable Support	
12	Cable Assembly (56$^{2)}$ 3M/4M/5M	
13	Back Cable Support	
14	Cable Connector Rear	
15	Control Lead Plug	
16	Nut 9/16–18” UNF	
17	Gas Inlet Adaptor Assem	
18	Cable Support Machine Side	
19	Steel Liner, For wire Φ0.8–1.0,3.5M	TDT00054
	Steel Liner, For wire Φ0.8–1.0,4.5M	
	Steel Liner, For wire Φ0.8–1.0,5.5M	

TIG TORCH

9 Series

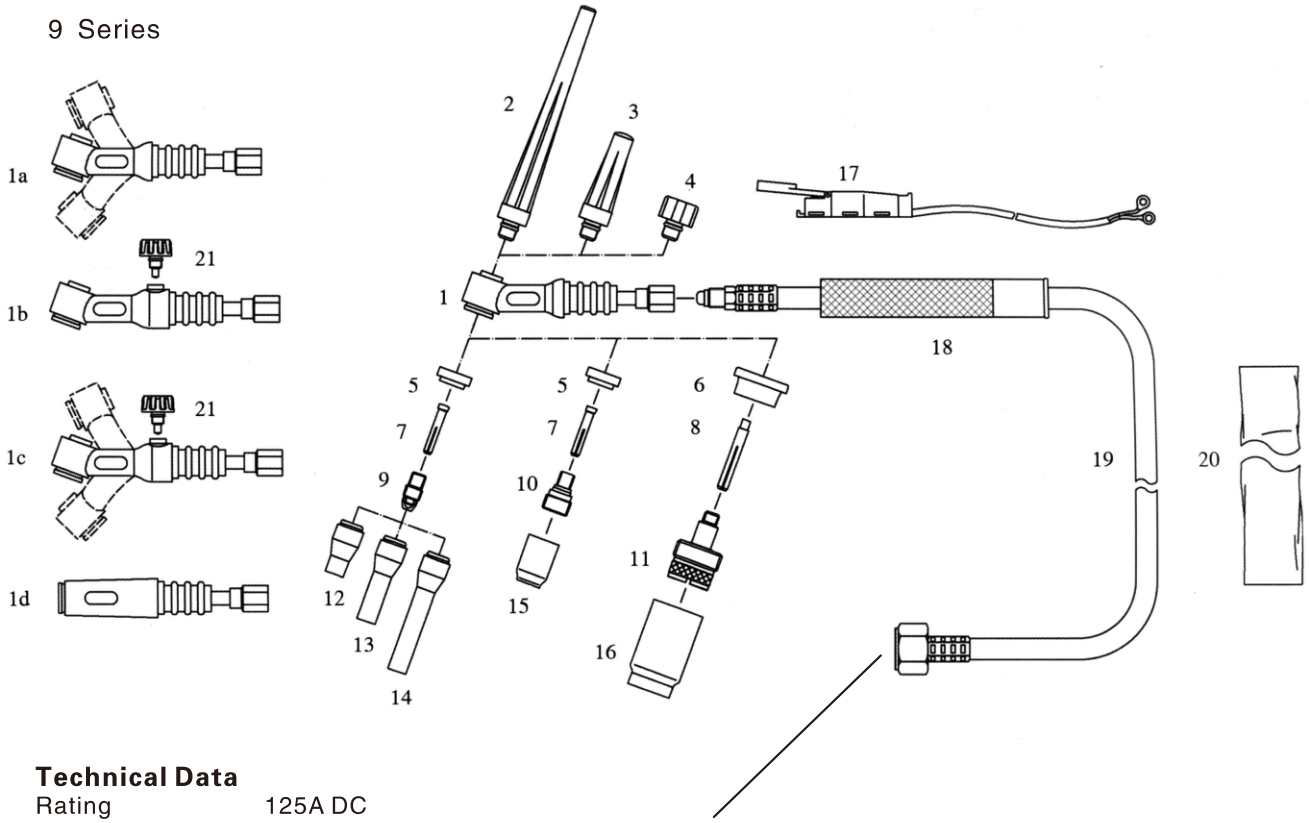

Technical Data

Rating	125A DC 80A AC
Duty Cycle	60%
Tungsten Rod	0.5~2.4mm

we can supply any cable termination according to customer request
The normal cable terminations styles see page 59–60

No.	Description	Part No.
	WP–9 Torch(Gas and Cable Whole)	WP–9–1(4M)
	WP–9 Torch(Gas and Cable Whole)	WP–9–1(8M)
	WP–9 Torch(Gas and Cable Separate)	WP–9–2(4M)
	WP–9 Torch(Gas and Cable Separate)	WP–9–2(8M)
1	Torch Body	WP–9
1a	Torch Body(Flexible)	WP–9F
1b	Torch Body(Valve)	WP–9V
1c	Torch Body(Flexible and Valve)	WP–9FV
1d	Torch Body(Pencil)	WP–9P
2	Long Back Cap	41V24
3	Medium Back Cap	41V35
4	Short Back Cap	41V33
5	Gasket	598882
6	Large Dia. Gas Lens Insulator	54N63–20
7	Collet	13N20,0.5mm
		13N21,1.0mm
		13N22,1.6mm
		13N22M,2.0mm
		13N23,2.4mm

ZHEJIANG LISSAM WELDING EQUIPMENT CO.,LTD
Http:// www.lissam.com E–mail: lissam@vip.163.com

No.	Description	Part No.
8	Large Dia. Gas Lens Collet	13N20L,0.5mm
		13N22L,1.6mm
		13N23L,2.4mm
9	Collet Body	13N25,0.5mm
		13N26,1.0mm
		13N27,1.6mm
		13N27M,2.0mm
		13N28,2.4mm
10	Small Gas Lens	45V41,0.5mm
		45V42,1.0mm
		45V43,1.6mm
		45V43M,2.0mm
		45V44,2.4mm
11	Large Stubby Gas Lens	45V0204S
		45V116S,1.6mm
		45V64S,2.4mm
12	Ceramic Nozzle	13N08,6mm
		13N09,8mm
		13N10,10mm
		13N11,11mm
		13N12,13mm
		13N13,16mm
13	Long Ceramic Nozzle	796F70,5mm
		796F71,6mm
		796F72,8mm
		796F73,10mm
14	Extra Long Ceramic Nozzle	796F74,5mm
		796F75,6mm
		796F76,8mm
		796F77,10mm
15	Ceramic Nozzle	53N58,6mm
		53N59,8mm
		53N60,10mm
		53N61,11mm
		53N61S,13mm
16	Large Dia. Ceramic Nozzle	57N75,10mm
		57N74,13mm
		53N88,16mm
		53N87,19mm
17	Switch(with wire)	
18	Handle	105Z55
19	Cable Assembly	
20	Cable Assembly Cover	
21	Valve Stem	VS-2

WELDING ACCESSORIES

TIG TORCH

12 Series

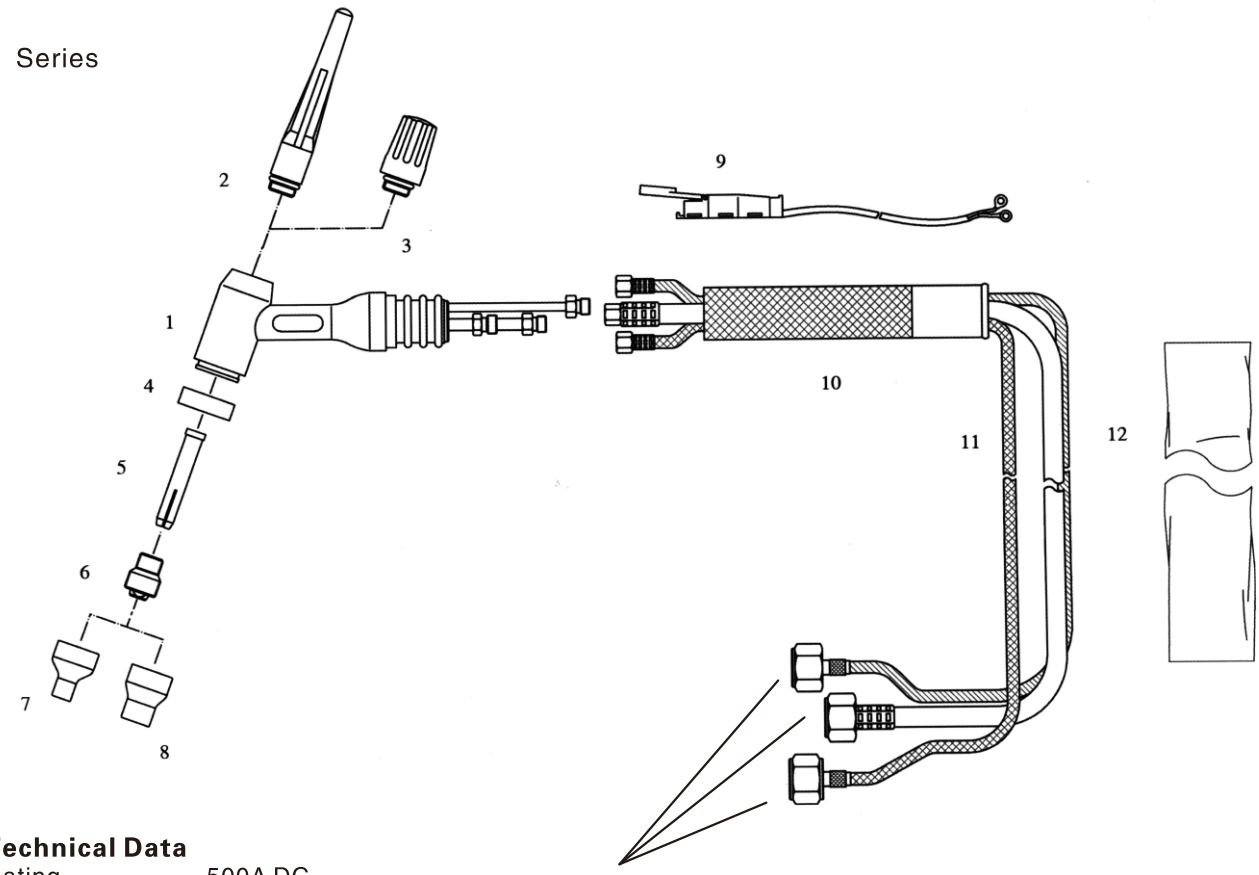

Technical Data

Rating	500A DC
Duty Cycle	100%
Tungsten Rod	1.6~6.4mm

we can supply any cable termination according to customer request
The normal cable terminations styles see page 65

No.	Description	Part No.
	WP-12 Torch	WP-12(4M)
	WP-12 Torch	WP-12(8M)
1	Torch Body	WP-12
2	Long Back Cap	56Y44
3	Short Back Cap	56Y45
4	Gasket	12NG
5	Collet	85Z14,1.6mm
		85Z15,2.4mm
		85Z16,3.2mm
		85Z17,4.0mm
		85Z18,4.8mm
		85Z19,6.4mm
6	Large Dia. Gas Lens Collet	11WP65,All size
7	Ceramic Nozzle	14N57,6mm
		14N58,8mm
		14N59,10mm
		14N60,11mm
		14N61,,13mm
		14N61-10,16mm
		14N61-12,19mm

ZHEJIANG LISSAM WELDING EQUIPMENT CO.,LTD
Http:// www.lissam.com E-mail: lissam@vip.163.com

No.	Description	Part No.
8	Extra Dia. Ceramic Nozzle	57N75,10mm
		57N74,13mm
		53N88,16mm
		53N87,19mm
9	Switch(with wire)	
10	Handle	85WP13
11	Cable Assembly	
12	Cable Assembly Cover	

TIG TORCH

17 Series

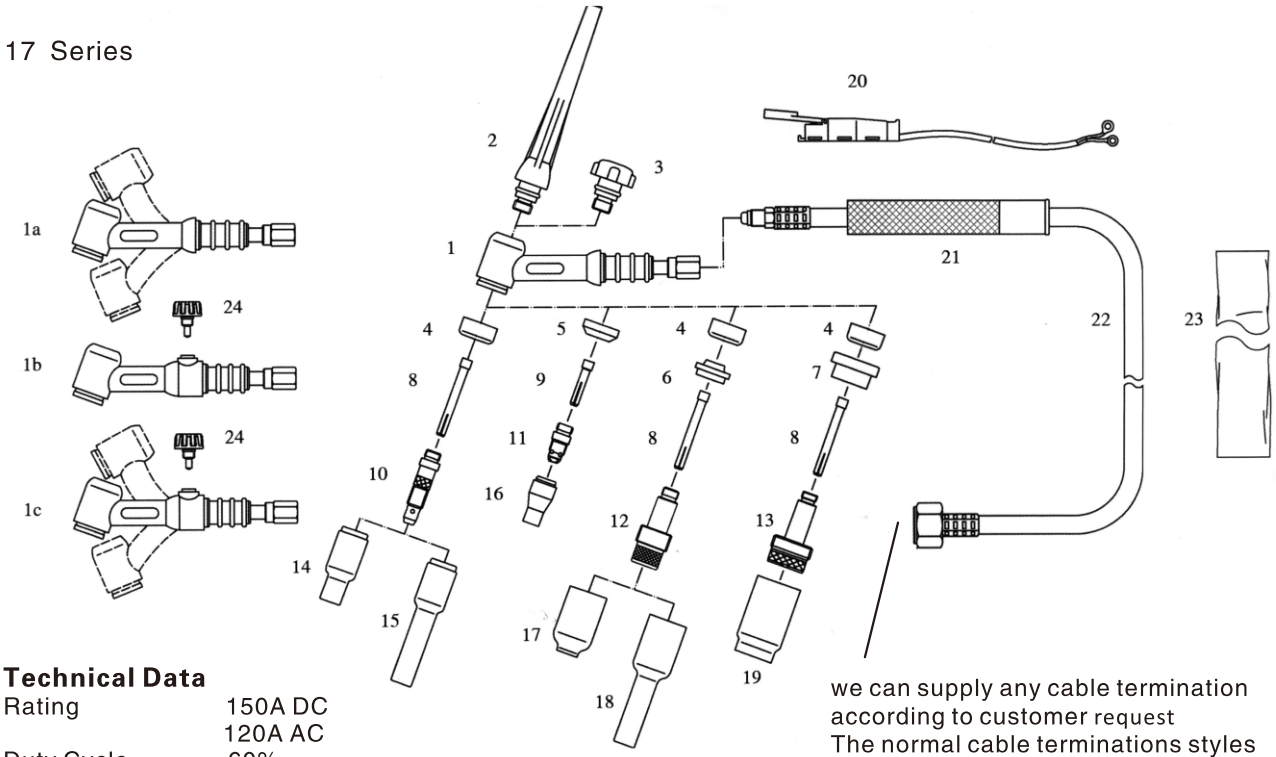

Technical Data

Rating	150A DC 120A AC
Duty Cycle	60%
Tungsten Rod	0.5~2.4mm

we can supply any cable termination according to customer request
The normal cable terminations styles see page 59–60

No.	Description	Part No.
	WP–17 Torch(Gas and Cable Whole)	WP–17–1(4M)
	WP–17 Torch(Gas and Cable Whole)	WP–17–1(8M)
	WP–17 Torch(Gas and Cable Separate)	WP–17–2(4M)
	WP–17 Torch(Gas and Cable Separate)	WP–17–2(8M)
1	Torch Body	WP–17
1a	Torch Body(Flexible)	WP–17F
1b	Torch Body(Valve)	WP–17V
1c	Torch Body(Flexible and Valve)	WP–17FV
2	Long Back Cap	57Y02
3	Short Back Cap	57Y04
4	Gasket	18CG
5	Stubby Gasket	18CG–20
6	Gas Lens Insulator	54N01
7	Large Dia. Gas Lens Insulator	54N63
8	Collet	10N21,0.5mm
		10N22,1.0mm
		10N23,1.6mm
		10N23M,2.0mm
		10N24,2.4mm
9	Stubby Collet	10N21S,0.5mm
		10N22S,1.0mm
		10N23S,1.6mm
		10NS,2.0mm
		10N24S,2.4mm

ZHEJIANG LISSAM WELDING EQUIPMENT CO.,LTD
Http:// www.lissam.com E–mail: lissam@vip.163.com

No.	Description	Part No.
10	Collet Body	10N29,0.5mm
		10N30,1.0mm
		10N31,1.6mm
		10N32,2.4mm
11	Stubby Collet Body	17CB20,All size
12	Medium Gas Lens	45V29,0.5mm
		45V24,1.0mm
		45V25,1.6mm
		45V25,2.4mm
13	Large Long Gas Lens	45V116,1.6mm
		45V64,2.4mm
14	Ceramic Nozzle	10N50,6mm
		10N49,8mm
		10N48,10mm
		10N47,11mm
		10N46,13mm
		10N45,16mm
		10N44,19mm
15	Extra Length Ceramic Nozzle	10N49L,8mm
		10N48L,10mm
		10N47L,11mm
16	Stubby Ceramic Nozzle	13N08,6mm
		13N09,8mm
		13N10,10mm
		13N11,11mm
		13N12,13mm
		13N13,16mm
17	Ceramic Nozzle	54N18,6mm
		54N17,8mm
		54N16,10mm
		54N15,11mm
		54N14,13mm
		54N19,19mm
18	Extra Long Ceramic Nozzle	54N17L,8mm
		54N16L,10mm
		54N15L,11mm
19	Extra Dia. Ceramic Nozzle	57N75,10mm
		57N74,13mm
		53N88,16mm
		53N87,19mm
20	Switch(with wire)	
21	Handle	105Z55
22	Cable Assembly	
23	Cable Assembly Cover	
24	Valve Stem	VS–2

TIG TORCH

18 Series

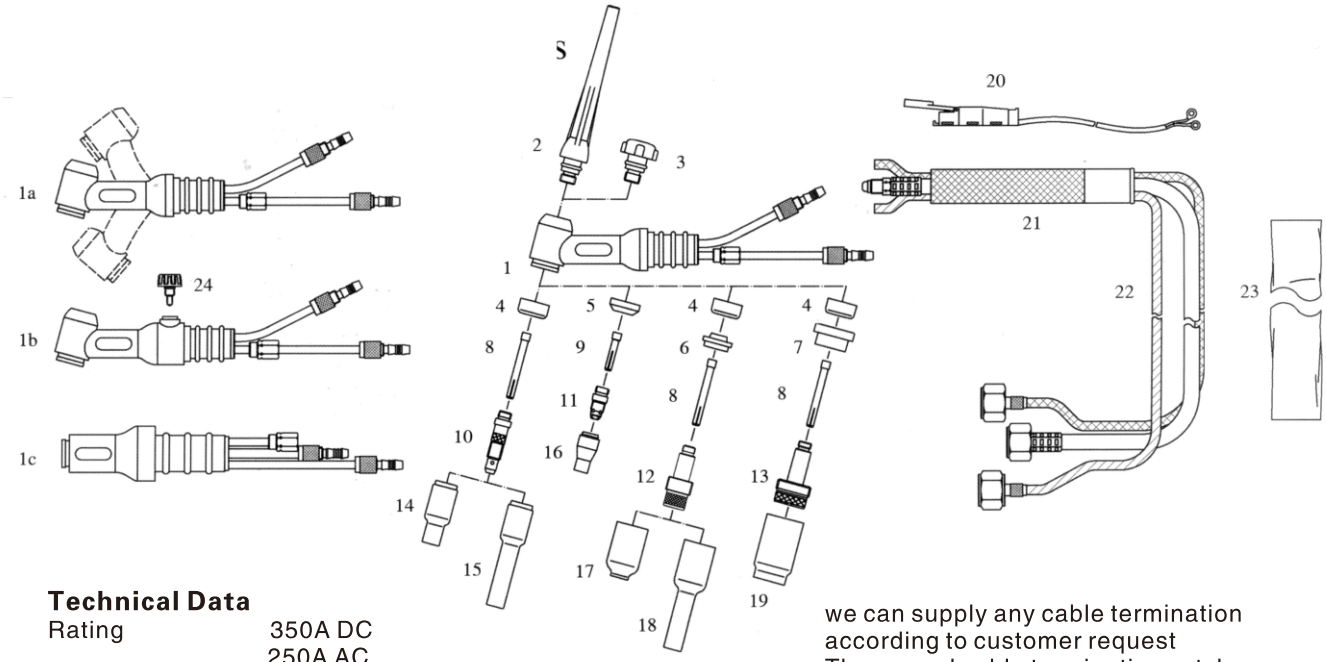

Technical Data

Rating	350A DC 250A AC
Duty Cycle	100%
Tungsten Rod	0.5~4.0mm

we can supply any cable termination according to customer request
The normal cable terminations styles see page 61

No.	Description	Part No.
	WP–18 Torch	WP–18(4M)
	WP–18 Torch	WP–18(8M)
1	Torch Body	WP–18
1a	Torch Body(Flexible)	WP–18F
1b	Torch Body(Valve)	WP–18V
1c	Torch Body(Pencil)	WP–18P
2	Long Back Cap	57Y02
3	Short Back Cap	57Y04
4	Gasket	18CG
5	Stubby Gasket	18CG–20
6	Gas Lens Insulator	54N01
7	Large Dia. Gas Lens Insulator	54N63
8	Collet	10N21,0.5mm
		10N22,1.0mm
		10N23,1.6mm
		10N23M,2.0mm
		10N24,2.4mm
		10N25,3.2mm
9	Stubby Collet	10N21S,0.5mm
		10N22S,1.0mm
		10N23S,1.6mm
		10N23MS.2.0mm
		10N24S,2.4mm
		10N25S,3.2mm

ZHEJIANG LISSAM WELDING EQUIPMENT CO.,LTD
Http:// www.lissam.com E–mail: lissam@vip.163.com

No.	Description	Part No.
10	Collet Body	10N29,0.5mm
		10N30,1.0mm
		10N31,1.6mm
		10N32,2.4mm
		10N28,3.2mm
11	Stubby Collet Body	17CB20,All size
12	Medium Gas Lens	45V29,0.5mm
		45V24,1.0mm
		45V25,1.6mm
		45V26,2.4mm
		45V27,3.2mm
13	Large Long Gas Lens	45V116,1.6mm
		45V64,2.4mm
		995795,3.2mm
		45V63,4.0mm
14	Ceramic Nozzle	10N50,6mm
		10N49,8mm
		10N48,10mm
		10N47,11mm
		10N46,13mm
		10N45,16mm
		10N44,19mm
15	Extra Length Ceramic Nozzle	10N49L,8mm
		10N48L,10mm
		10N49L,11mm
16	Stubby Ceramic Nozzle	13N08,6mm
		13N09,8mm
		13N10,10mm
		13N11,11mm
		13N12,13mm
		13N13,16mm
17	Ceramic Nozzle	54N18,6mm
		54N17,10mm
		54N16,10mm
		54N15,11mm
		54N14,13mm
		54N19,17mm
18	Extra Long Ceramic Nozzle	54N17L,8mm
		54N16L,10mm
		54N15L,11mm
19	Extra Dia. Ceramic Nozzle	57N75,10mm
		57N74,13mm
		53N88,16mm
		53N87,19mm
20	Switch(with wire)	
21	Handle	105Z55
22	Cable Assembly	
23	Cable Assembly Cover	
24	Valve Stem	VS–2

TIG TORCH

20 Series

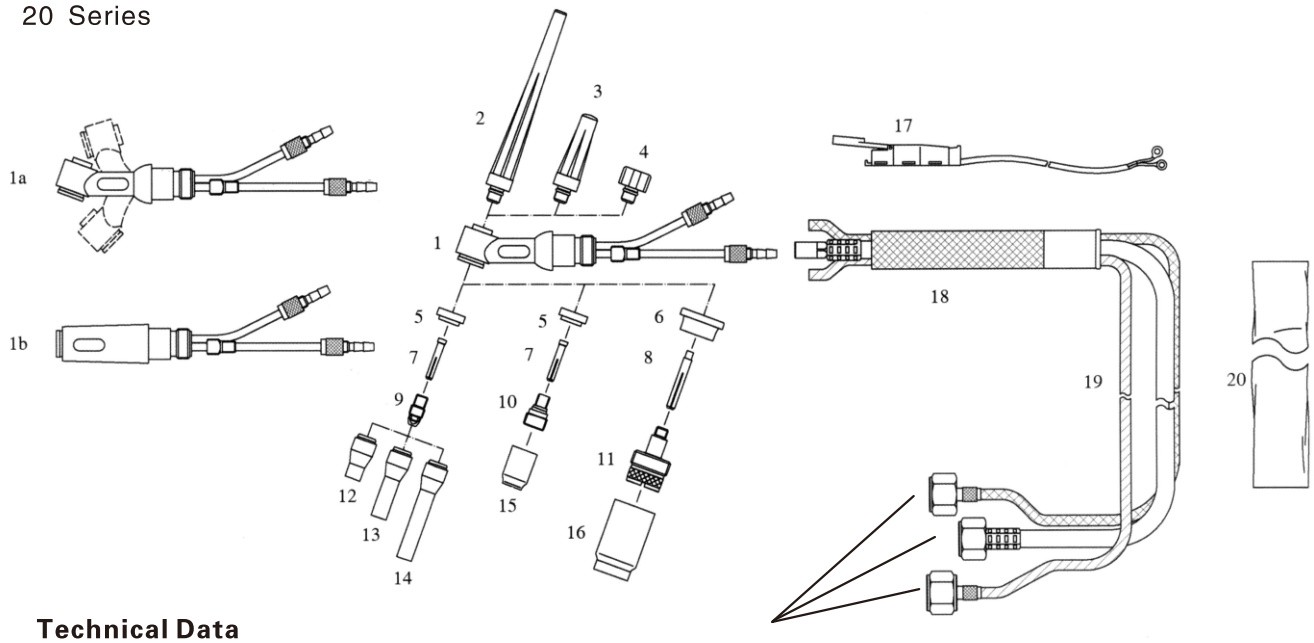

Technical Data

Rating	250A DC 175A AC
Duty Cycle	100%
Tungsten Rod	0.5~3.2mm

we can supply any cable termination according to customer request

The normal cable terminations styles see page 62

No.	Description	Part No.
	WP-20 Torch	WP-20(4M)
	WP-20 Torch	WP-20(8M)
1	Torch Body	WP-20
1a	Torch Body(Flexible)	WP-20F
1b	Torch Body(Pencil)	WP-20P
2	Long Back Cap	41V24
3	Medium Back Cap	41V35
4	Short Back Cap	41V33
5	Gasket	598882
6	Large Dia. Gas Lens Insulator	54N63-20
7	Collet	13N20,0.5mm
		13N21,1.0mm
		13N22,1.6mm
		13N22M,2.0mm
		13N23,2.4mm
		13N24,3.2mm
8	Large Dia. Gas Lens Collet	13N20L,0.5mm
		13N21L,1.0mm
		13N22L,1.6mm
		13N23L,2.4mm
		13N24L,3.2mm

ZHEJIANG LISSAM WELDING EQUIPMENT CO.,LTD
Http:// www.lissam.com E-mail: lissam@vip.163.com

No.	Description	Part No.
9	Collet Body	13N25,0.5mm
		13N26,1.0mm
		13N27,1.6mm
		13N27M,2.0mm
		13N28.2.4mm
		13N29,3.2mm
10	Small Gas Lens	45V41,0.5mm
		45V42,1.0mm
		45V43,1.6mm
		45V43M,2.0mm
		45V44,2.4mm
		45V45,3.2mm
11	Large Stubby Gas Lens	45V0204S,0.5/1.0mm
		45V116S,1.6mm
		45V64SS,2.4mm
		995795S,3.2mm
12	Ceramic Nozzle	13N08,6mm
		13N09,8mm
		13N10,10mm
		13N11,11mm
		13N12,13mm
		13N13,16mm
13	Long Ceramic Nozzle	796F70,5mm
		796F71,6mm
		796F72,8mm
		796F73,10mm
14	Extra Long Ceramic Nozzle	796F74,5mm
		796F75,6mm
		796F76,8mm
		796F77,10mm
		53N58,6mm
15	Ceramic Nozzle	53N59,8mm
		53N60,10mm
		53N61,11mm
		53N61S,13mm
16	Extra Dia. Ceramic Nozzle	57N75,10mm
		57N74,13mm
		53N88,16mm
		53N87,19mm
17	Switch(with wire)	
18	Handle	105Z55
19	Cable Assembly	
20	Cable Assembly Cover	

TIG TORCH

26 Series

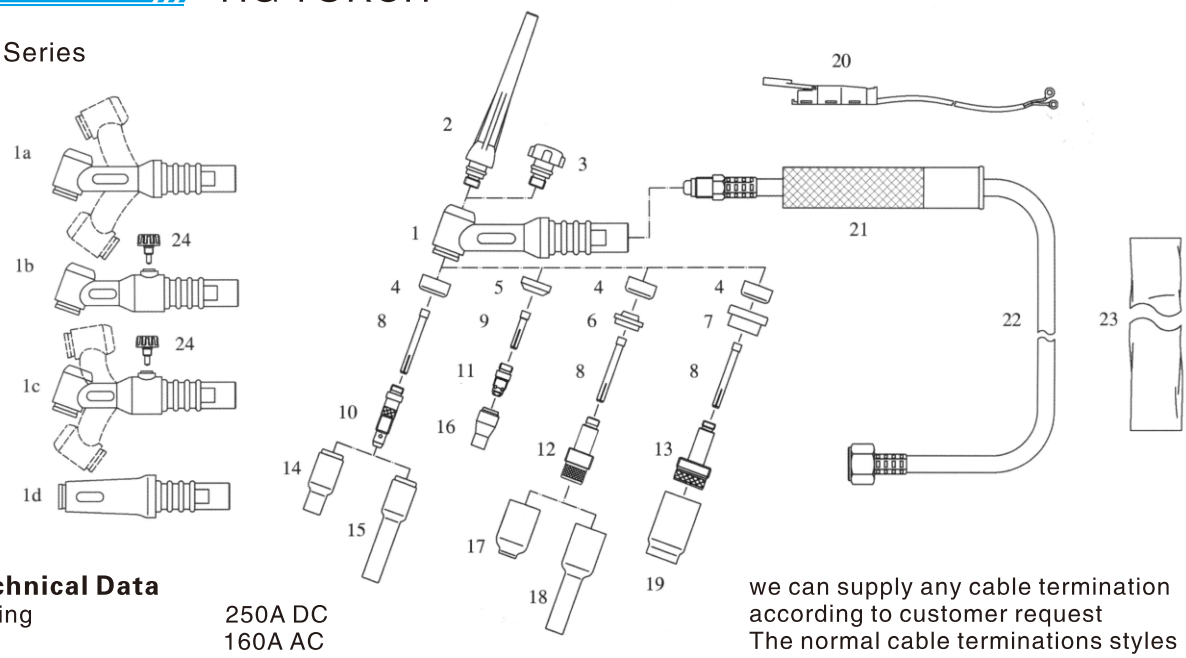

Technical Data

Rating	250A DC 160A AC
Duty Cycle	60%
Tungsten Rod	0.5~3.2mm

we can supply any cable termination according to customer request
The normal cable terminations styles see page 63–64

No.	Description	Part No.
	WP–26 Torch(Gas and Cable Whole)	WP–26–1(4M)
	WP–26 Torch(Gas and Cable Whole)	WP–26–1(8M)
	WP–26 Torch(Gas and Cable Separate)	WP–26–2(4M)
	WP–26 Torch(Gas and Cable Separate)	WP–26–2(8M)
1	Torch Body	WP–26
1a	Torch Body(Flexible)	WP–26F
1b	Torch Body(Valve)	WP–26V
1c	Torch Body(Flexible and Valve)	WP–26FV
1d	Torch Body(Pencil)	WP–26P
2	Long Back Cap	57Y02
3	Short Back Cap	57Y04
4	Gasket	18CG
5	Stubby Gasket	18CG–20
6	Gas Lens Insulator	54N01
7	Large Dia. Gas Lens Insulator	54N63
8	Collet	10N21,0.5mm
		10N22,1.0mm
		10N23,1.6mm
		10N23M,2.0mm
		10N24,2.4mm
		10N25,3.2mm
9	Stubby Collet	10N21S,0.5mm
		10N22S,1.0mm
		10N23S,1.6mm
		10N23MS,2.0mm
		10N24S,2.4mm
		10N25S,3.2mm

ZHEJIANG LISSAM WELDING EQUIPMENT CO.,LTD
Http:// www.lissam.com E–mail: lissam@vip.163.com

No.	Description	Part No.
10	Collet Body	10N29,0.5mm
		10N30,1.0mm
		10N31,1.6mm
		10N32,2.4mm
		10N28,3.2mm
11	Stubby Collet Body	17CB20,All size
12	Medium Gas Lens	45V29,0.5mm
		45V24,1.0mm
		45V25,1.6mm
		45V26,2.4mm
		45V27,3.2mm
13	Large Long Gas Lens	45V116,1.6mm
		45V64,2.4mm
		995795,3.2mm
		45V63,4.0mm
14	Ceramic Nozzle	10N50,6mm
		10N49,8mm
		10N48,10mm
		10N47,11mm
		10N46,13mm
		10N45,16mm
		10N44,19mm
15	Extra Length Ceramic Nozzle	10N49L,8mm
		10N48L,10mm
		10N47L,11mm
16	Short Ceramic Nozzle	13N08,6mm
		13N09,8mm
		13N10,10mm
		13N11,11mm
		13N12,13mm
		13N13,16mm
17	Ceramic Nozzle	54N18,6mm
		54N17,8mm
		54N16,10mm
		54N15,11mm
		54N14,13mm
		54N19,17mm
18	Extra Long Ceramic Nozzle	54N17L,8mm
		54N16L,10mm
		54N15L,11mm
19	Extra Dia. Ceramic Nozzle	57N75,10mm
		57N74,13mm
		53N88,16mm
		53N87,19mm
20	Switch(with wire)	
21	Handle	85WP13
22	Cable Assembly	
23	Cable Assembly Cover	
24	Valve Stem	VS–1

TIG TORCH

27 Series

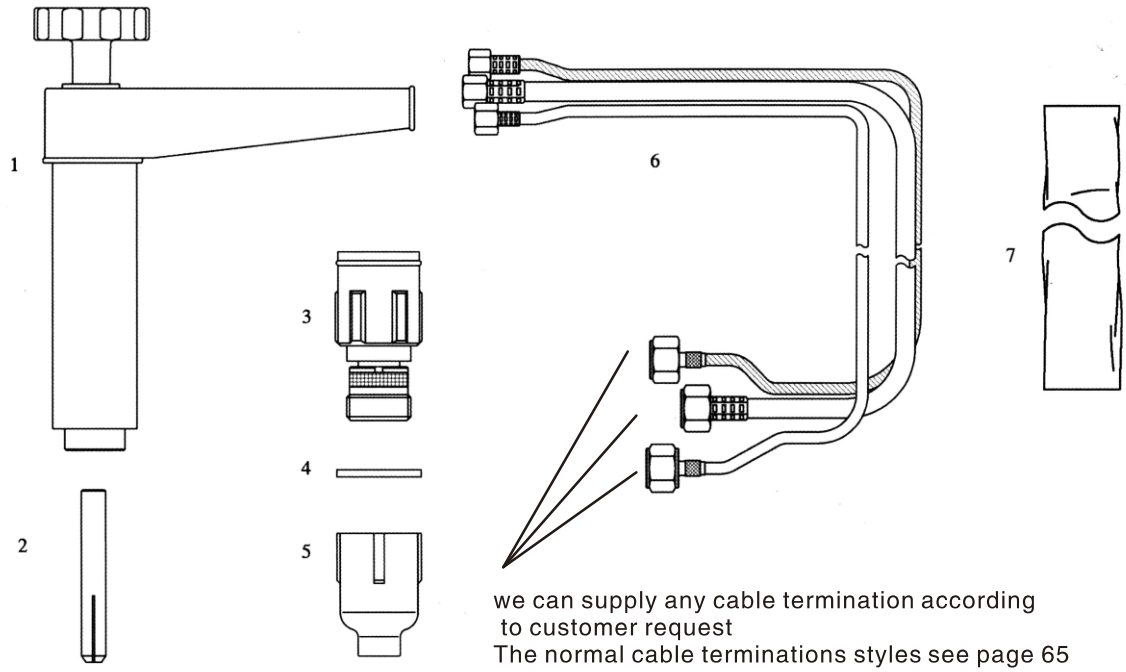

we can supply any cable termination according to customer request
The normal cable terminations styles see page 65

Technical Data

Rating	500A DC
Duty Cycle	100%
Tungsten Rod	1.0~6.4mm

No.	Description	Part No.
	WP-27 Torch	WP-27-1(4M)
	WP-27 Long Torch	WP-27-1L(4M)
1	Torch Body (8" Long, Include Shaft and boot)	WP-27
	Torch Body (20" Long, Include Shaft and boot)	WP-27(Long)
2	Collet	57N46,1.6mm
		57N47,2.4mm
		57N48,3.2mm
		57N49,4.0mm
3	Gas Lens	49V23,1.6mm
		49V24,2.4mm
		49V25,3.2mm
		49V26,4.0MM
4	Gasket	57N56
5	Ceramic Nozzle	57N75,10mm
		57N74,13mm
		53N88,16mm
		53N87,19mm
		53N89,Short
6	Cable Assembly	
7	Cable Assembly Cover	

ZHEJIANG LISSAM WELDING EQUIPMENT CO.,LTD
Http:// www.lissam.com E-mail: lissam@vip.163.com

TIG TORCH

WP-9,WP-9F,WP-9V,WP-9FV,&WP-17,WP-17F,WP-17V ,WP-17FV
Torch Terminations(Cable and Gas Whole)

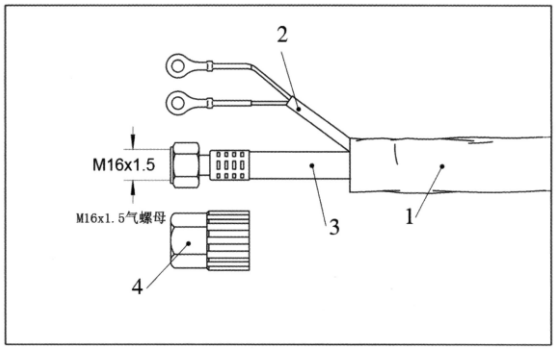

No.	Description
1	Cable Assembly Cover, For 4M (12.5 feet), Rubber/Jean
	Cable Assembly Cover, For 8M (25 feet), Rubber/Jean
2	Control Wire
3	Cable 10mm^2, 4M(12.5 feet)
	Cable 10mm^2, 8M(25 feet)
4	Nut Cup (SW19)

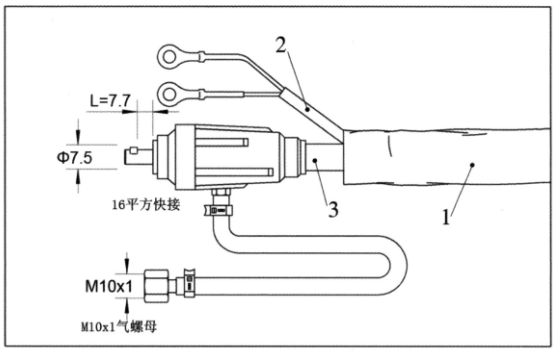

No.	Description
1	Cable Assembly Cover, For 4M (12.5 feet), Rubber/Jean
	Cable Assembly Cover, For 8M (25 feet), Rubber/Jean
2	Control Wire
3	Cable 10mm^2, 4M(12.5 feet)
	Cable 10mm^2, 8M(25 feet)

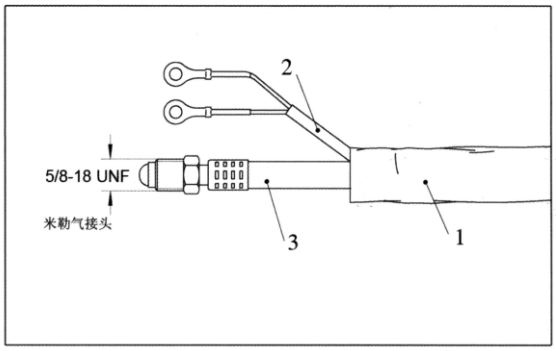

No.	Description
1	Cable Assembly Cover, For 4M (12.5 feet), Rubber/Jean
	Cable Assembly Cover, For 8M (25 feet), Rubber/Jean
2	Control Wire
3	Cable 10mm^2, 4M(12.5 feet)
	Cable 10mm^2, 8M(25 feet)

TIG TORCH

WP-9,WP-9F,WP-9V,WP-9FV,&WP-17,WP-17F,WP-17V ,WP-17FV
Torch Terminations(Cable and Gas Separate)

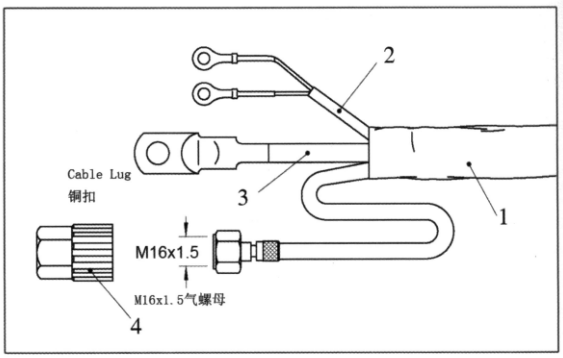

No.	Description
1	Cable Assembly Cover, For 4M (12.5 feet), Rubber/Jean
	Cable Assembly Cover, For 8M (25 feet), Rubber/Jean
2	Control Wire
3	Cable 16mm^2, 4M(12.5 feet)
	Cable 16mm^2, 8M(25 feet)
4	Nut Cup (SW19)

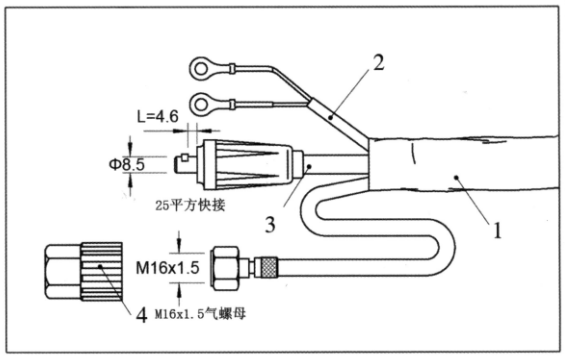

No.	Description
1	Cable Assembly Cover, For 4M (12.5 feet), Rubber/Jean
	Cable Assembly Cover, For 8M (25 feet), Rubber/Jean
2	Control Wire
3	Cable 16mm^2, 4M(12.5 feet)
	Cable 16mm^2, 8M(25 feet)
4	Nut Cup (SW19)

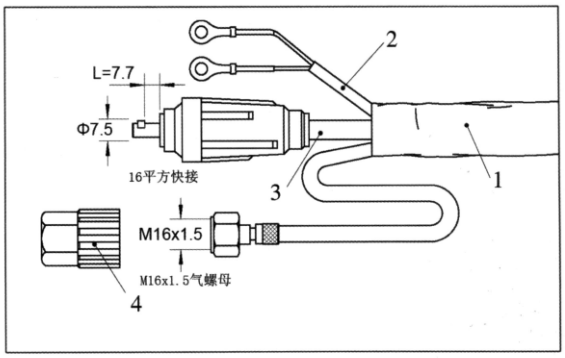

No.	Description
1	Cable Assembly Cover, For 4M (12.5 feet), Rubber/Jean
	Cable Assembly Cover, For 8M (25 feet), Rubber/Jean
2	Control Wire
3	Cable 16mm^2, 4M(12.5 feet)
	Cable 16mm^2, 8M(25 feet)
4	Nut Cup (SW19)

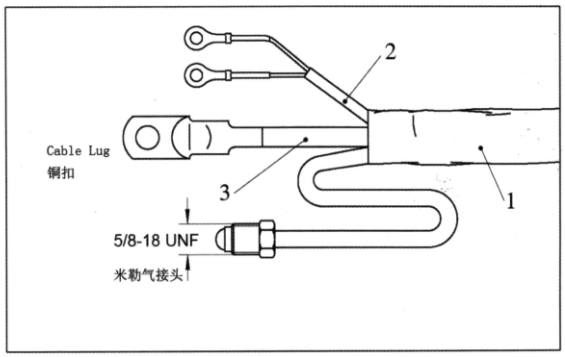

No.	Description
1	Cable Assembly Cover, For 4M (12.5 feet), Rubber/Jean
	Cable Assembly Cover, For 8M (25 feet), Rubber/Jean
2	Control Wire
3	Cable 16mm^2, 4M(12.5 feet)
	Cable 16mm^2, 8M(25 feet)

ZHEJIANG LISSAM WELDING EQUIPMENT CO.,LTD
Http:// www.lissam.com E-mail: lissam@vip.163.com

TIG TORCH

WP-18,WP-18F,WP-18V,WP-P Torch Terminations

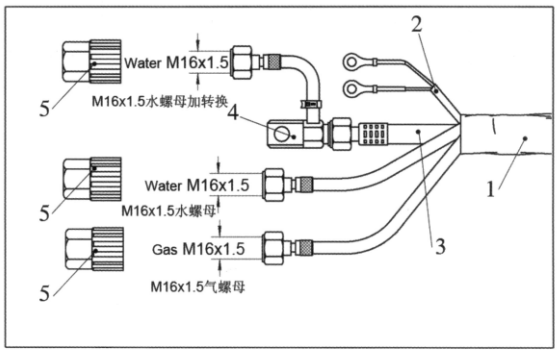

No.	Description
1	Cable Assembly Cover, For 4M (12.5 feet), Rubber/Jean
	Cable Assembly Cover, For 8M (25 feet), Rubber/Jean
2	Control Wire
3	Cable 8mm^2, 4M(12.5 feet)
	Cable 8mm^2, 8M(25 feet)
4	Cable Adapter
5	Nut Cup (SW19)

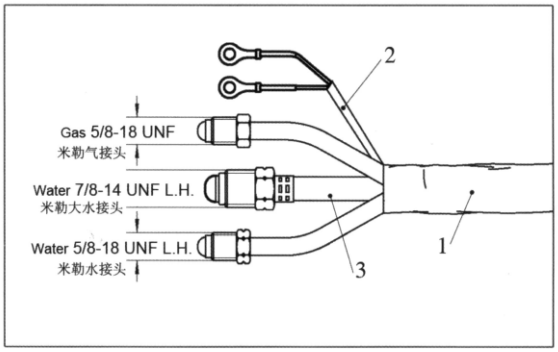

No.	Description
1	Cable Assembly Cover, For 4M (12.5 feet), Rubber/Jean
	Cable Assembly Cover, For 8M (25 feet), Rubber/Jean
2	Control Wire
3	Cable 8mm^2, 4M(12.5 feet)
	Cable 8mm^2, 8M(25 feet)

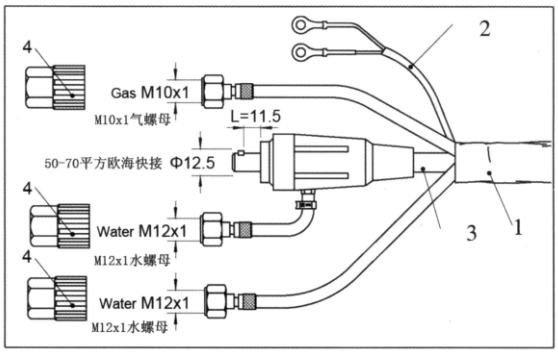

No.	Description
1	Cable Assembly Cover, For 4M (12.5 feet), Rubber/Jean
	Cable Assembly Cover, For 8M (25 feet), Rubber/Jean
2	Control Wire
3	Cable 8mm^2, 4M(12.5 feet)
	Cable 8mm^2, 8M(25 feet)
4	Nut Cup (SW17)

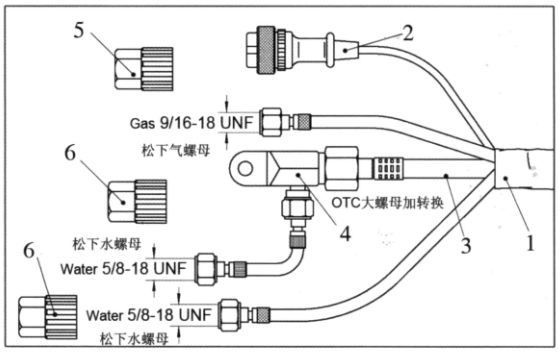

No.	Description
1	Cable Assembly Cover, For 4M (12.5 feet), Rubber/Jean
	Cable Assembly Cover, For 8M (25 feet), Rubber/Jean
2	Plug 2-pin, Panasonic
3	Cable 8mm^2, 4M(12.5 feet)
	Cable 8mm^2, 8M(25 feet)
4	Cable Adapter
5	Nut Cup (SW17)
6	Nut Cup (SW19)

TIG TORCH

WP-20,WP-20F,WP-20P Torch Terminations

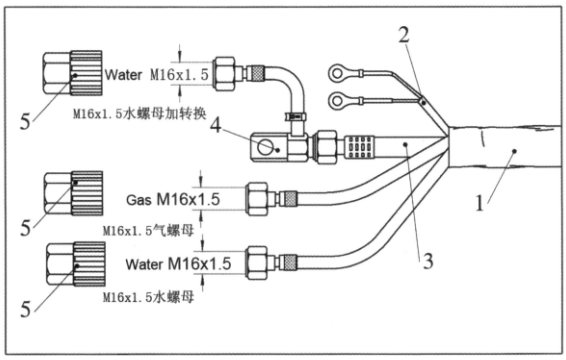

No.	Description
1	Cable Assembly Cover, For 4M (12.5 feet), Rubber/Jean
	Cable Assembly Cover, For 8M (25 feet), Rubber/Jean
2	Control Wire
3	Cable 4mm^2, 4M(12.5 feet)
	Cable 4mm^2, 8M(25 feet)
4	Cable Adapter
5	Nut Cup (SW19)

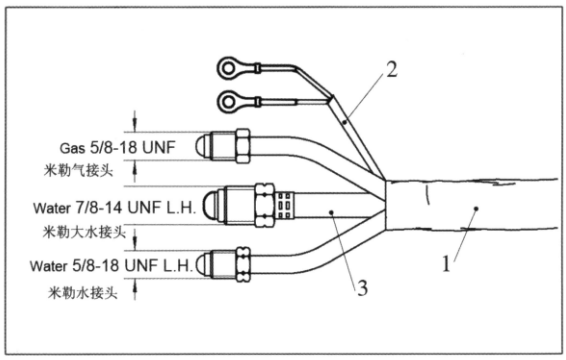

No.	Description
1	Cable Assembly Cover, For 4M (12.5 feet), Rubber/Jean
	Cable Assembly Cover, For 8M (25 feet), Rubber/Jean
2	Control Wire
3	Cable 4mm^2, 4M(12.5 feet)
	Cable 4mm^2, 8M(25 feet)

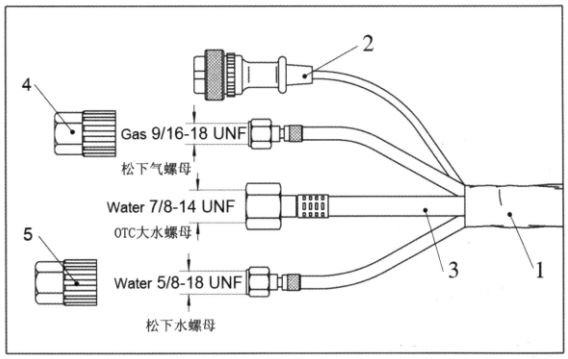

No.	Description
1	Cable Assembly Cover, For 4M (12.5 feet), Leather/Jean
	Cable Assembly Cover, For 8M (25 feet), Leather/Jean
2	Plug 2-Pin, Panasonic
3	Cable 4mm^2, 4M(12.5 feet)
	Cable 4mm^2, 8M(25 feet)
4	Nut Cup (SW17)
5	Nut Cup (SW19)

ZHEJIANG LISSAM WELDING EQUIPMENT CO.,LTD
Http:// www.lissam.com E-mail: lissam@vip.163.com

TIG TORCH

WP-26,WP-26F,WP-26V,WP-26FV,WP-26P Torch Terminations (Cable and Gas Whole)

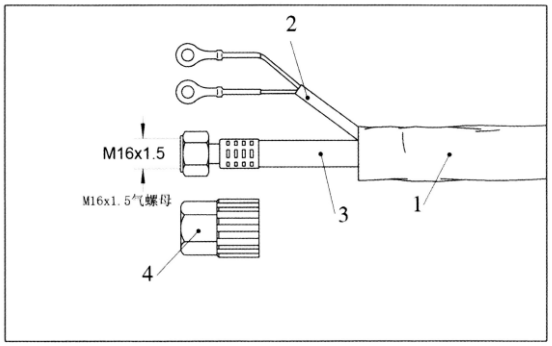

No.	Description
1	Cable Assembly Cover, For 4M(12.5 feet),Rubber/Jean
	Cable Assembly Cover, For 8M(25 feet),Rubber/Jean
2	Control Wire
3	Cable 14mm ²,4M(12.5 feet)
	Cable 14mm ²,8M(25 feet)
4	Nut Cup (SW19)

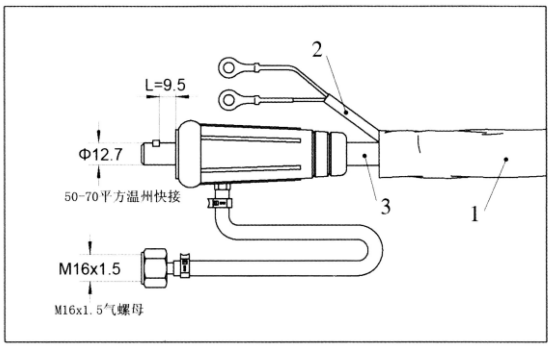

No.	Description
1	Cable Assembly Cover, For 4M(12.5 feet),Rubber/Jean
	Cable Assembly Cover, For 8M(25 feet),Rubber/Jean
2	Control Wire
3	Cable 14mm ²,4M(12.5 feet)
	Cable 14mm ²,8M(25 feet)

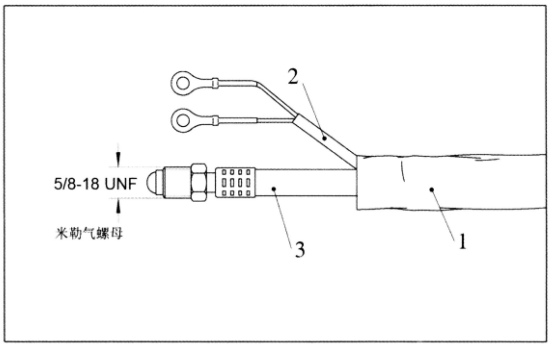

No.	Description
1	Cable Assembly Cover, For 4M(12.5 feet),Rubber/Jean
	Cable Assembly Cover, For 8M(25feet),Rubber/Jean
2	Control Wire
3	Cable 14mm ²,4M(12.5 feet)
	Cable 14mm ²,8M(25 feet)

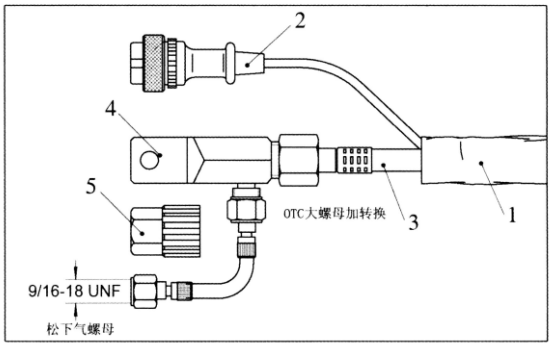

No.	Description
1	Cable Assembly Cover, For 4M(12.5 feet),Rubber/Jean
	Cable Assembly Cover, For 8M(25 feet),Rubber/Jean
2	Plug 2-Pin, Panasonic
3	Cable 14mm ²,4M(12.5 feet)
	Cable 14mm ²,8M(25 feet)
4	Cable Adapter
5	Nut Cup (SW17)

TIG TORCH

WP-26，WP-26F,WP-26V,WP26FV,WP-26P Torch Terminations(Cable and Gas Separate)

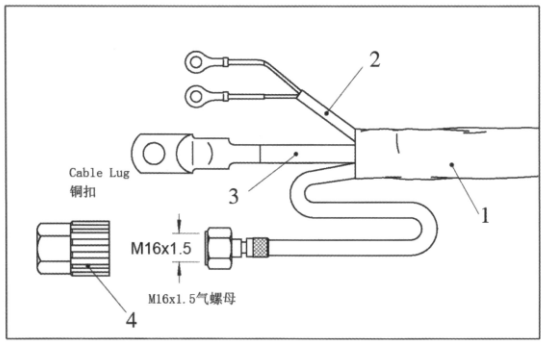

No.	Description
1	Cable Assembly Cover, For 4M(12.5 feet),Rubber/Jean
	Cable Assembly Cover, For 8M(25 feet),Rubber/Jean
2	Control Wire
3	Cable 25mm ², 4M(12.5 feet)
	Cable 25mm ², 8M(25 feet)
4	Nut Cup(SW19)

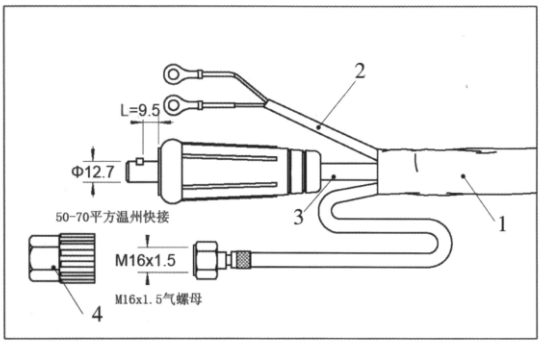

No.	Description
1	Cable Assembly Cover, For 4M(12.5 feet),Rubber/Jean
	Cable Assembly Cover, For 8M(25 feet),Rubber/Jean
2	Control Wire
3	Cable 25mm ², 4M(12.5 feet)
	Cable 25mm ², 8M(25 feet)
4	Nut Cup(SW19)

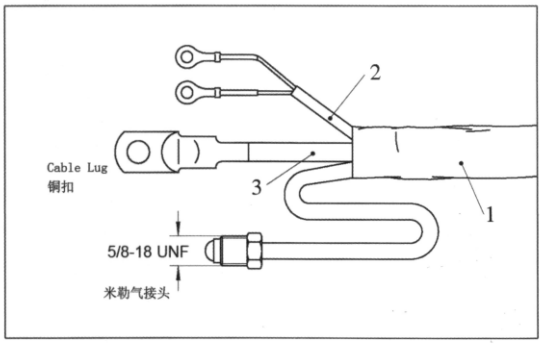

No.	Description
1	Cable Assembly Cover, For 4M(12.5 feet),Rubber/Jean
	Cable Assembly Cover, For 8M(25 feet),Rubber/Jean
2	Control Wire
3	Cable 25mm ², 4M(12.5 feet)
	Cable 25mm ², 8M(25 feet)

ZHEJIANG LISSAM WELDING EQUIPMENT CO.,LTD
Http:// www.lissam.com E-mail: lissam@vip.163.com

TIG TORCH

WP–12,&WP–27 Torch Terminations

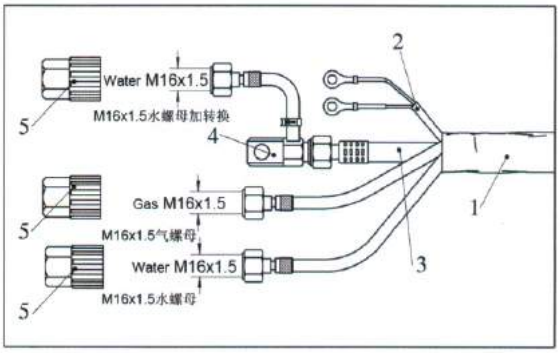

No.	Description
1	Cable Assembly Cover, For 4M(12.5 feet),Rubber/Jean
	Cable Assembly Cover, For 8M(25 feet),Rubber/Jean
2	Control Wire
3	Cable 12mm ²,4M(12.5 feet)
	Cable 12mm ²,8M(25 feet)
4	Cable Adapter
5	Nut Cup (SW19)

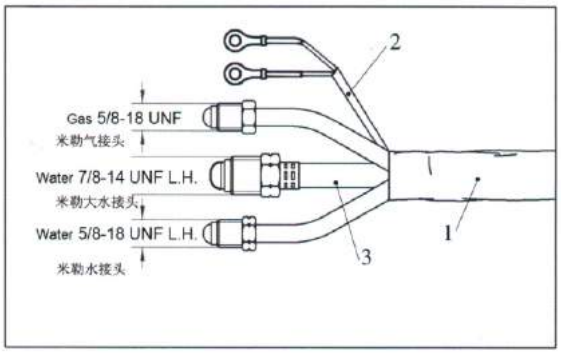

No.	Description
1	Cable Assembly Cover, For 4M(12.5 feet),Rubber/Jean
	Cable Assembly Cover, For 8M(25 feet),Rubber/Jean
2	Control Wire
3	Cable 12mm ², 4M(12.5 feet)
	Cable 12mm ², 8M(25 feet)

PLASMA TORCH

P–80

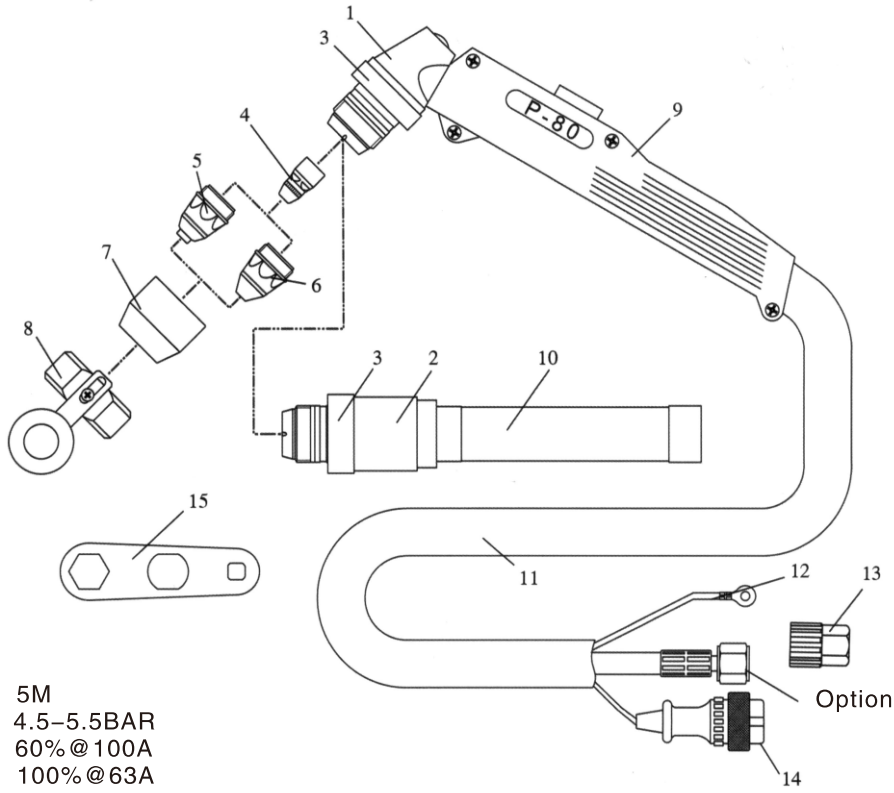

Technical Data

Standard Length	5M
Air Pressure	4.5–5.5BAR
Duty Cycle	60%@100A
	100%@63A

Option:9/16–18UN
M16×1.5
M14×1.5
M14×1

No.	Description	Part No.
	P–80 Complete Torch	
	P–80 Torch Head With Handle	P–80
1	P–80A Hand Torch Head	P–80A
	P–80B Hand Torch Head	P–80B
2	P–80AP Machine Torch Head	P–80AP
	P–80BP Machine Torch Head	P–80BP
3	Insulate Ring	LS TFQ08102
4	Electrode	LS TET02033
5	Nozzle 1.1mm 40A	
	Nozzle 1.3mm 63A	LS TET01310
	Nozzle 1.5mm 80A	LS TET01512
	Nozzle 1.7mm 100A	LS TSM06626
6	Old Style Nozzle 1.3mm 63A	LS TET01305
	Old Style Nozzle 1.5mm 80A	LS TET01507
	Old Style Nozzle 1.7mm 100A	LS TET01809
7	Shield With Connector Silver Plated	LS TGN02004
	Normal Shield	
8	Site Wheel	
9	Handle, For Hand Torch	LS TKC00005
10	Handle, For Machine Torch	LS TKC06102
11	Cable Assembly	
12	Pilot Cable	
13	Nut Cup	
14	Panasonic 2–Pin	
15	Spanner	

ZHEJIANG LISSAM WELDING EQUIPMENT CO.,LTD
Http:// www.lissam.com E–mail: lissam@vip.163.com

PLASMA TORCH

P–160

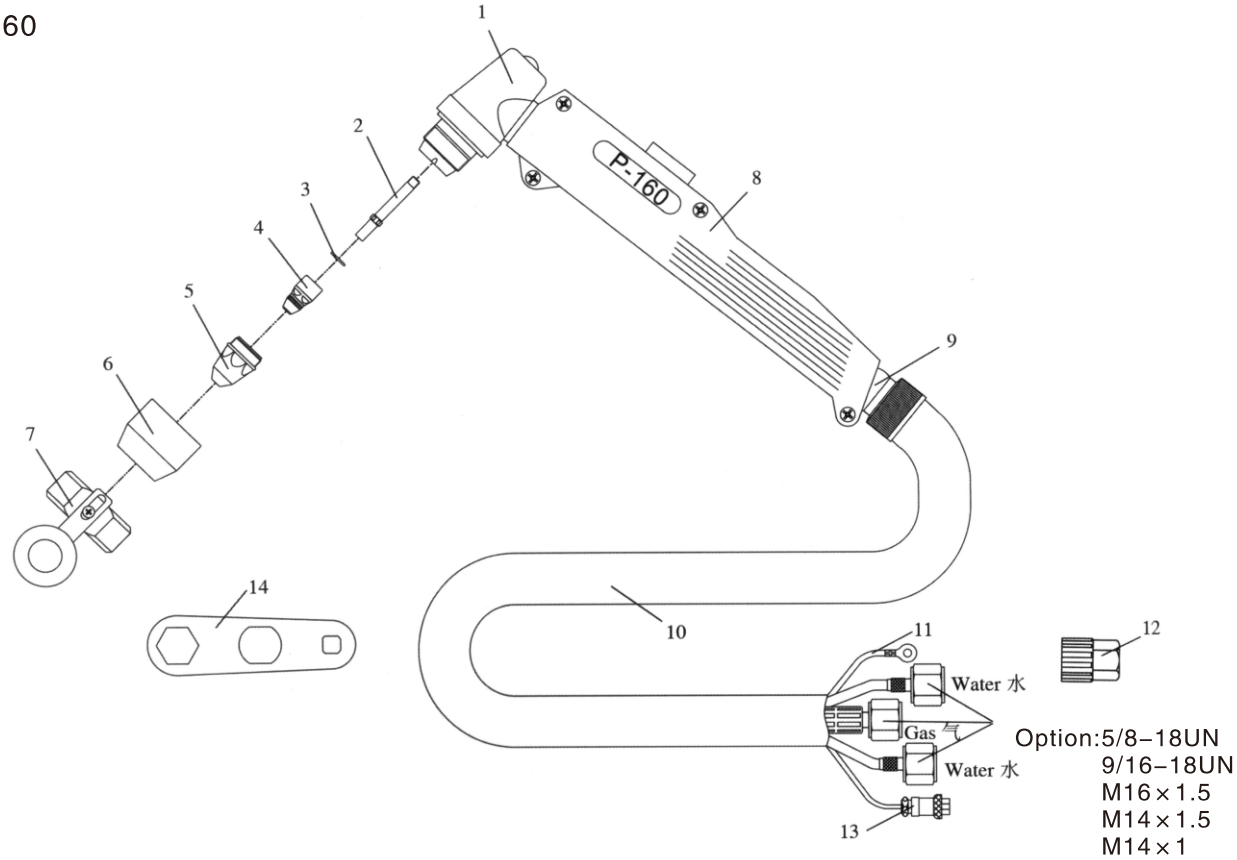

Technical Data

Standard Length	5M
Air Pressure	4.5–5.5bar
Duty Cycle	100%@160A

No.	Description	Part No.
	P–160 Complete Torch	
	P–160 Torch Head With Handle	
1	P–160 Torch Head	P16001
2	Water Cooling Tube	P16002
3	O–Ring	
4	Electrode	P16003
5	Nozzle	P16004
6	Shield	P16005
7	Site Wheel	
8	Handle	
9	Universal Coupling	
10	Cable Assembly	
11	Pilot Cable	
12	Nut Cup	
13	Panasonic Small 2–Pin	
14	Spanner	

PLASMA TORCH

S–45

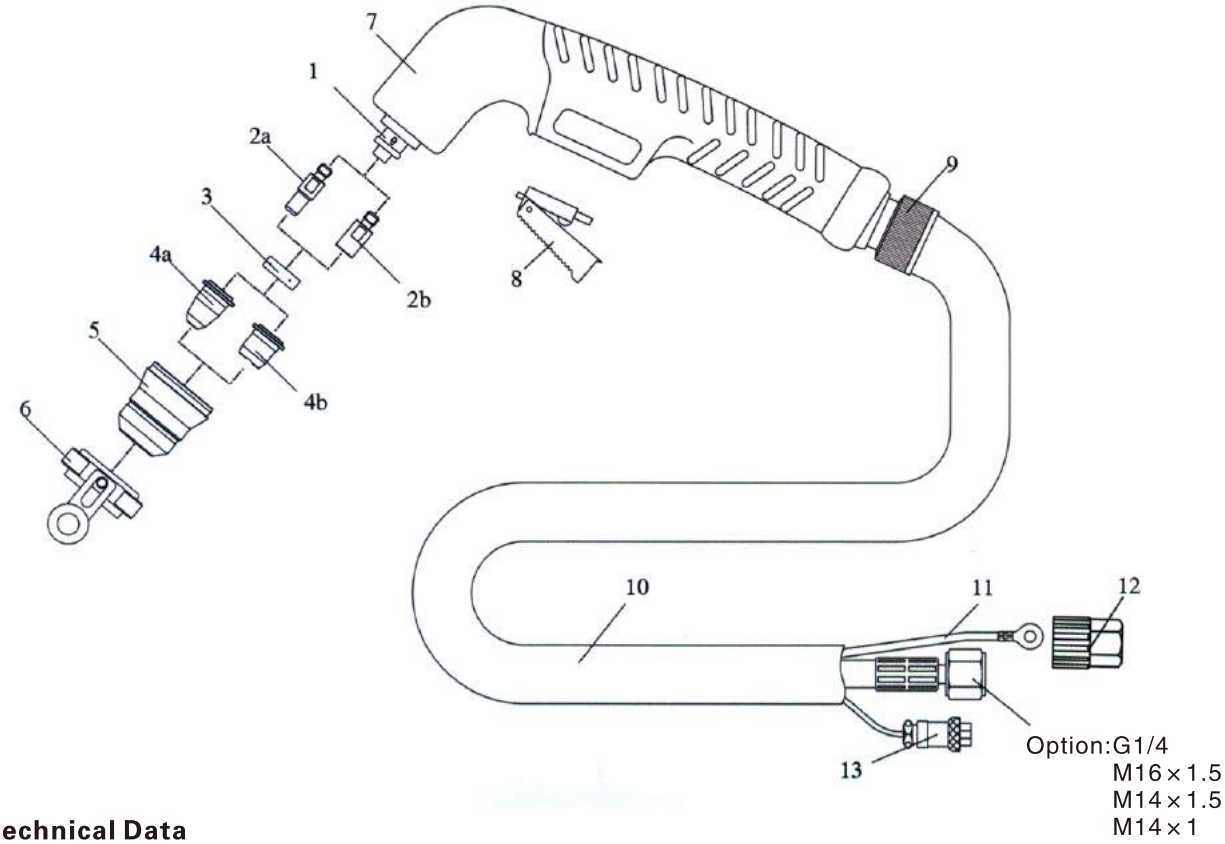

Technical Data

Standard Length	5M
Air Pressure	4.5–5.5bar
Duty Cycle	60%@40A

No.	Description	Part No.
	S–45 Complete Torch	
	S–45 Torch Head With Handle	
1	S–45 Torch Head	LS PF0125
2a	Long Electrode 20–30A	LS PR0110
2b	Electrode 40A	LS PR0105
3	Swirl Ring	LS PE0106
4a	Long Nozzle, 0.8mm 20–30A	LS PD0116–08
4b	Nozzle, 1.0mm 40A	LS PD0102–10
5	Shield	LS PC0116
6	Site Wheel	LS CV0024
7	Handle	LS TP0080
8	Switch	LS BX0020
9	Universal Coupling	
10	Cable Assembly	LS Ph0121
11	Pilot Cable	
12	Nut Cup	
13	Panasonic Small 2–Pin	

ZHEJIANG LISSAM WELDING EQUIPMENT CO.,LTD
Http:// www.lissam.com E–mail: lissam@vip.163.com

PLASMA TORCH

A140

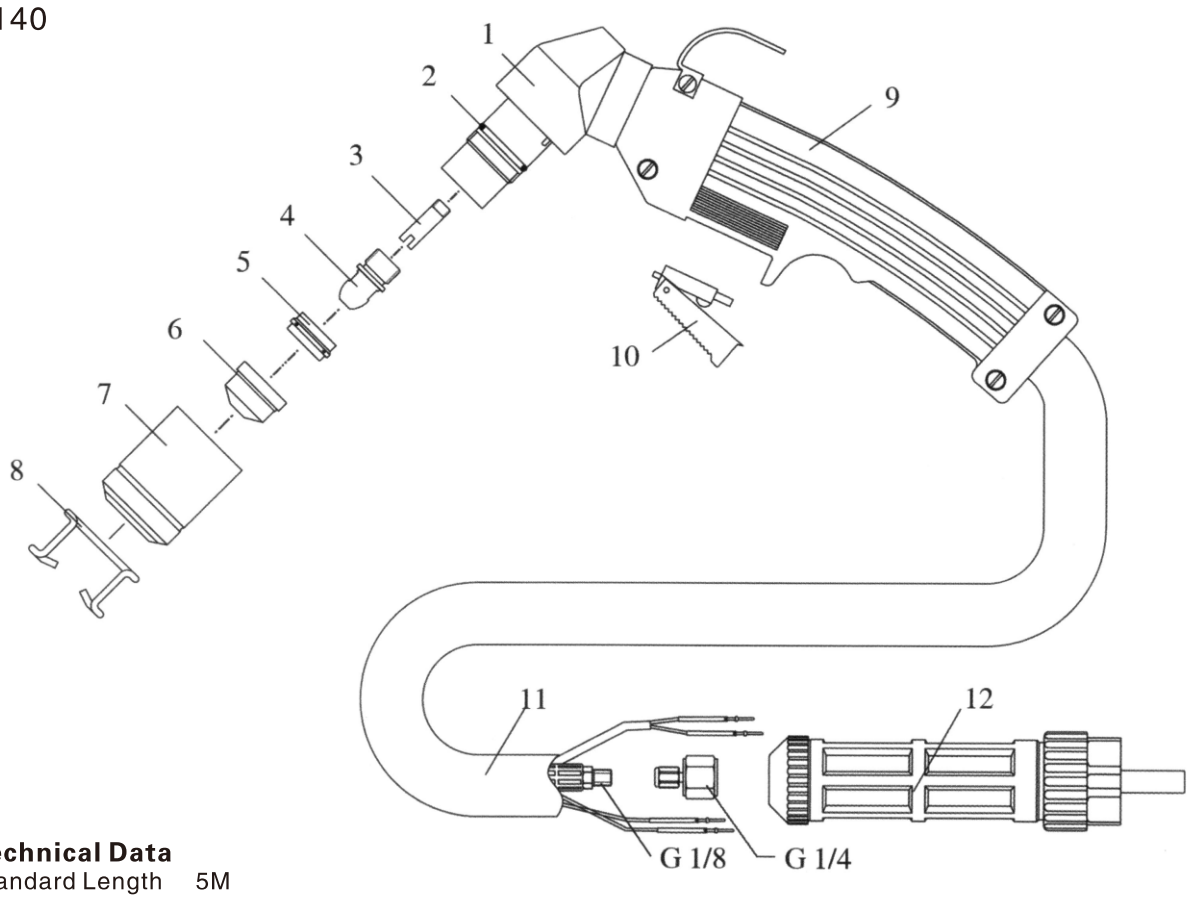

Technical Data

Standard Length	5M
Air Pressure	4.5–5.5bar
Duty Cycle	60%@140A
	100%@100A

No.	Description	Part No.
	A140 Complete Torch	
	A140 Torch Head With Handle	
1	A140 Torch Head	LS PF0101
2	O–Ring	LS EA0131
3	Gas Cooling Tube	LS FH0563
4	Electrode	LS PR0101
5	Swirl Ring	LS PE0101
6	Nozzle 1.1mm	LS PD0101–11
	Nozzle 1.4mm	LS PD0101–14
	Nozzle 1.7mm	LS PD0101–17
	Nozzle 1.9mm	LS PD0101–19
7	Shield	LS PC0101
8	Space Spring	LS CV0011
9	Handle	
10	Switch	
11	Cable Assembly	
12	Central Adaptor	LS Fy0023

PLASMA TORCH

CB150

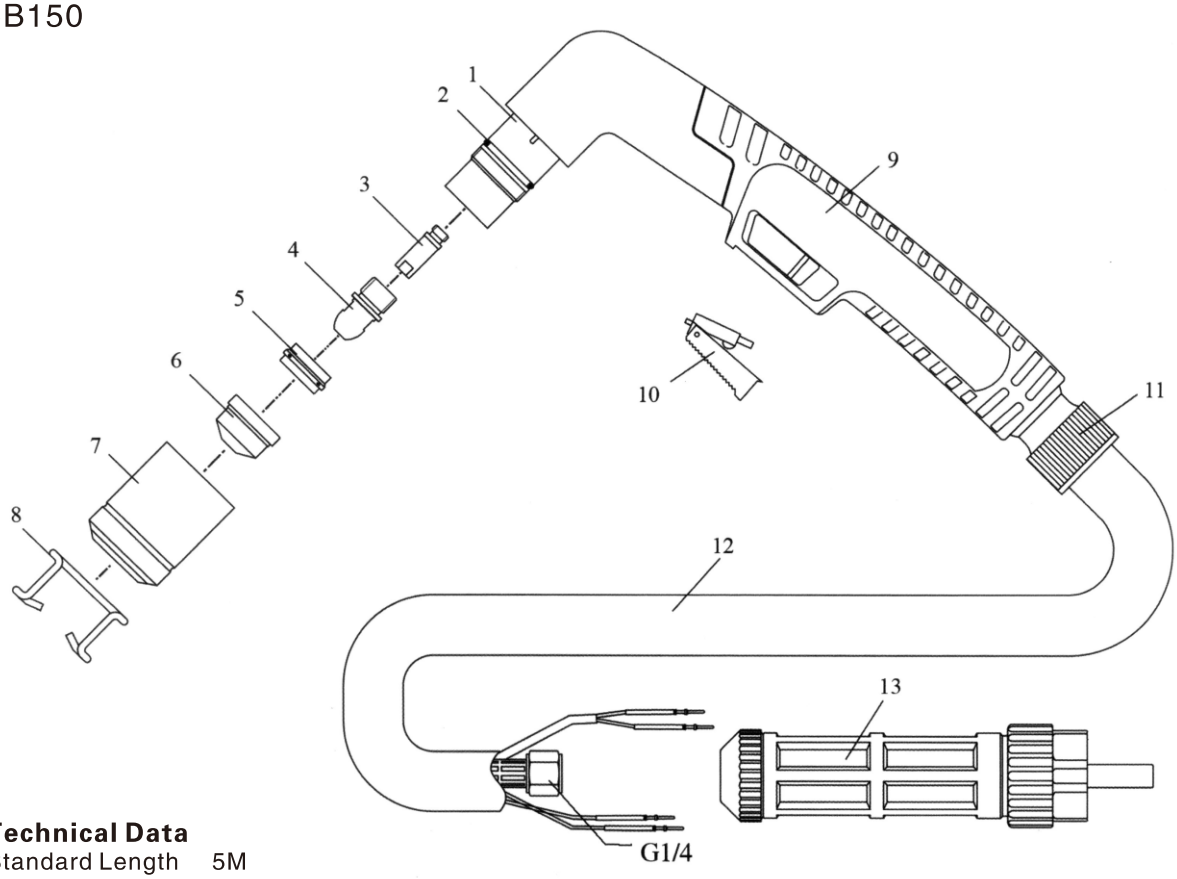

Technical Data

Standard Length	5M
Air Pressure	4.5–5.5bar
Duty Cycle	60%@150A
Duty Cycle	100%@110A

No.	Description	Part No.
	CB150 Complete Torch	
	CB150 Torch Head With Handle	
1	CB150 Torch Head	LS PF0080
2	O–Ring	LS EA0131
3	Gas Cooling Tube	LS FH0213
4	Electrode	LS PR0034
5	Swirl Ring	LS PE0009
6	Nozzle 1.1mm	LS PD0026–11
	Nozzle 1.3mm	LS PD0026–13
	Nozzle 1.6mm	LS PD0026–16
	Nozzle 1.8mm	LS PD0026–18
7	Shield	LS PC0002
8	Space Spring	LS CV0011
9	Handle	LS TP0110
10	Switch	LS BX0020
11	Universal Coupling	LS BW0311
12	Cable Assembly	LS PH0174
13	Central Adaptor	LS Fy0023

ZHEJIANG LISSAM WELDING EQUIPMENT CO.,LTD
Http:// www.lissam.com E–mail: lissam@vip.163.com

PLASMA TORCH

AW201

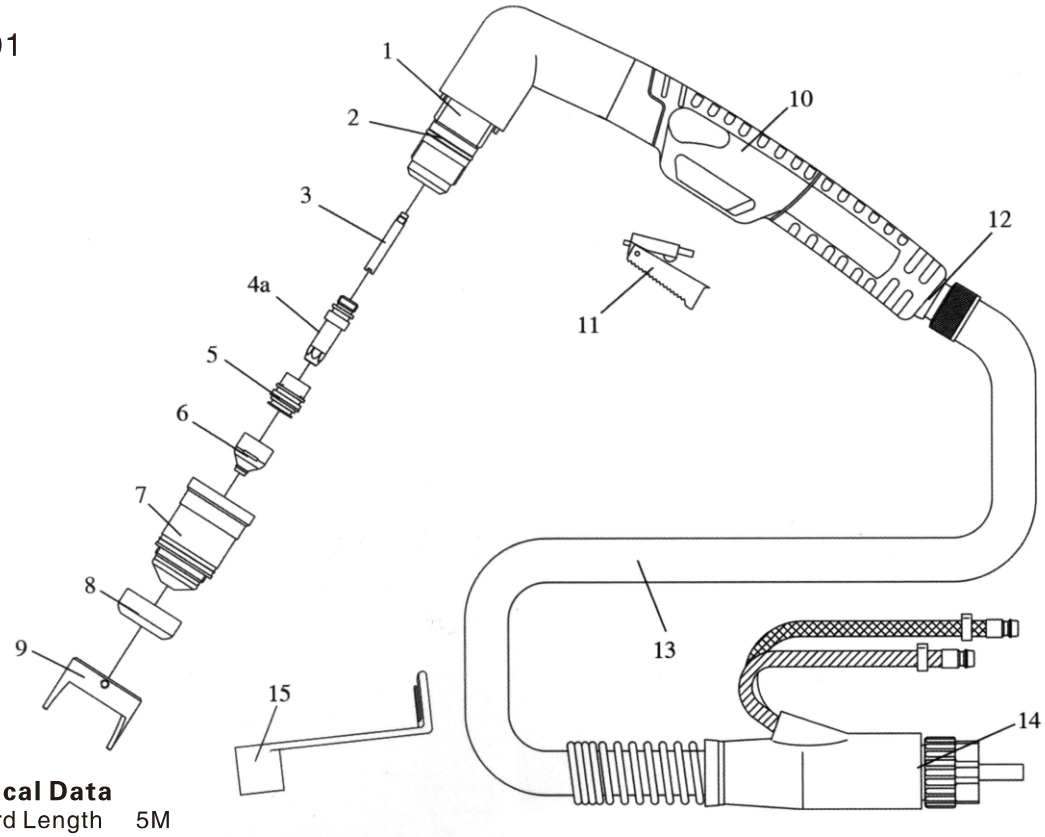

Technical Data

Standard Length	5M
Air Pressure	4.5–5.5bar
Duty Cycle	100%@200A

No.	Description	Part No.
	Aw201 Complete Torch	
	AW201 Torch Head With Handle	
1	AW201 Torch Head	LS PG0005
2	O–Ring	LS EA0203
3	Water Cooling Tube	LS FH0886
4	Electrode	LS PR0118
5	Swirl Ring	LS PE0114
6	Nozzle 1.2mm	LS PD0115–12
	Nozzle 1.4mm	LS PD0115–14
	Nozzle 1.6mm	LS PD0115–16
	Nozzle 1.8mm	LS PD0115–18
	Nozzle 2.0mm	LS PD0115–20
7	Shield	LS PC0125
8	Ceramic Shield	LS CV0078
9	Stand–off Guide	LS CV0012
10	Handle	LS TP0111
11	Switch	LS BX0020
12	Universal Coupling	LS BW0311
13	Cable Assembly	LS PH0057
14	Central Adaptor	LS PT0024
15	Spanner	LS Cv0080

PLASMA TORCH PARTS

Powermax1650

Machine Torch
40Amp-80Amp

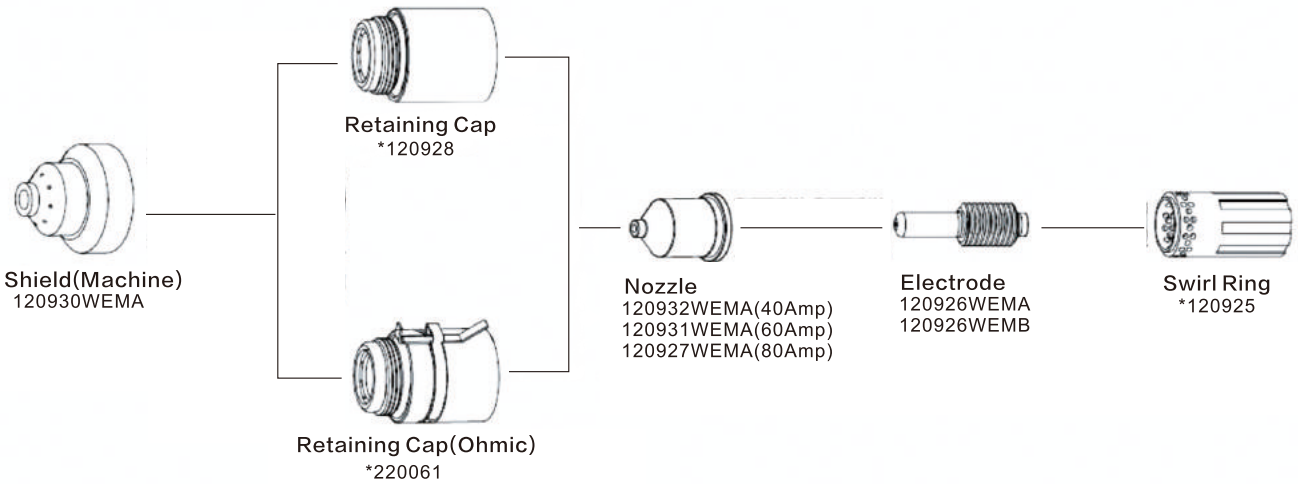

100Amp

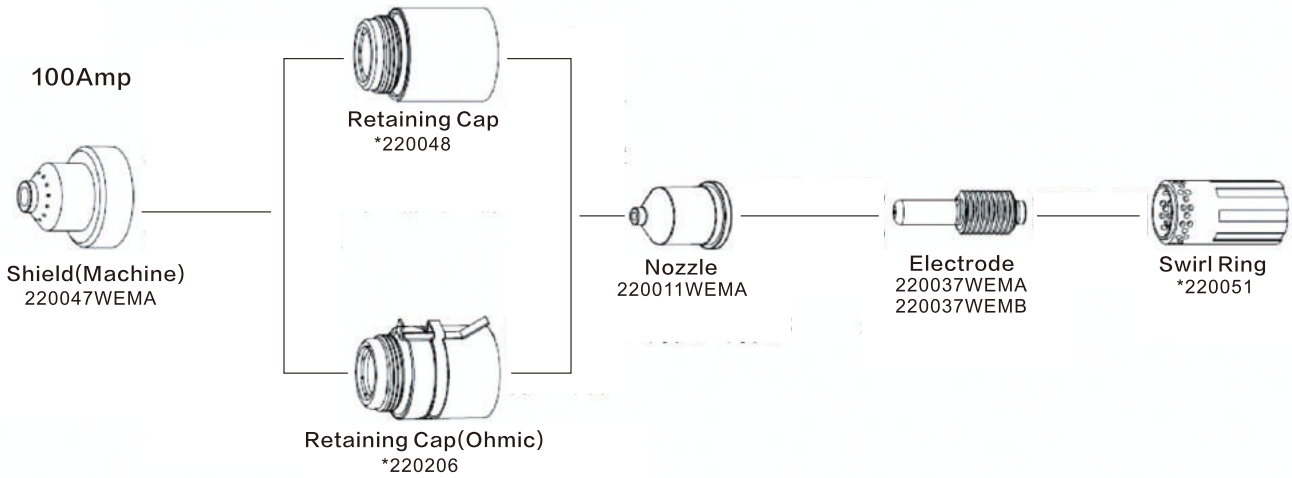

HYPERTHERM、Powermax1650 are the registered trademarks of Hypertherm,Inc-Lissam is no way affiliated with the above-named manufacture and its trademarks. References to the above name machines, torches, consumables, and reference numbers are for convenience only.

ZHEJIANG LISSAM WELDING EQUIPMENT CO.,LTD
Http:// www.lissam.com E-mail: lissam@vip.163.com

PLASMA TORCH PARTS

MAX200 Mild steel

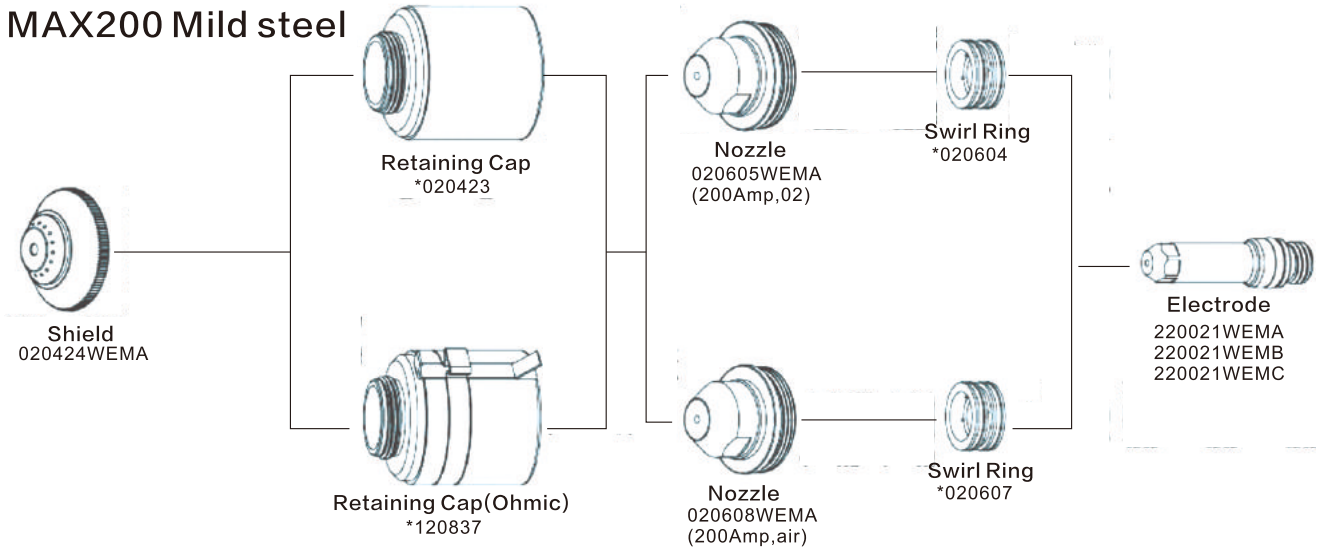

HT2000/Hyspeed HT2000

200Amp

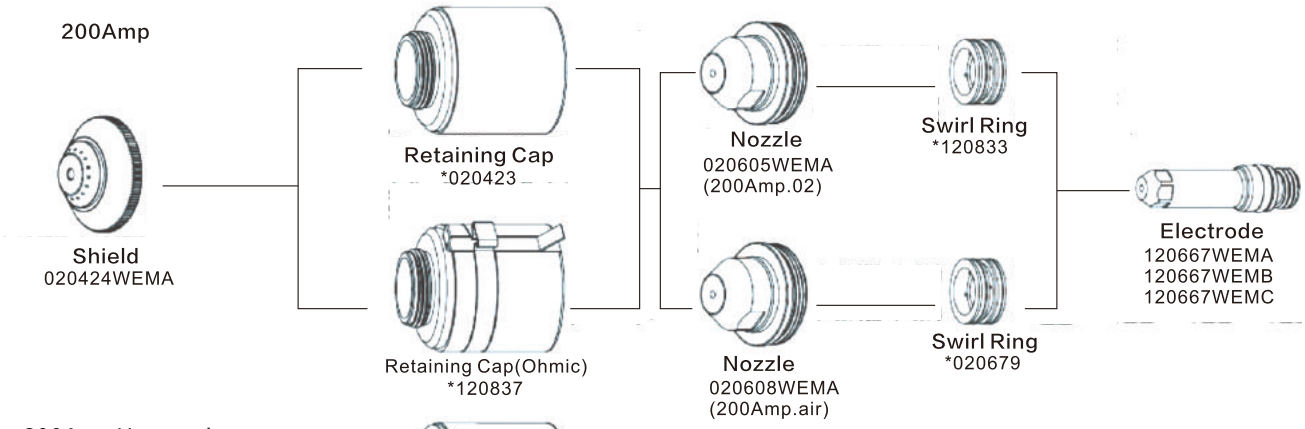

200Amp Hyspeed

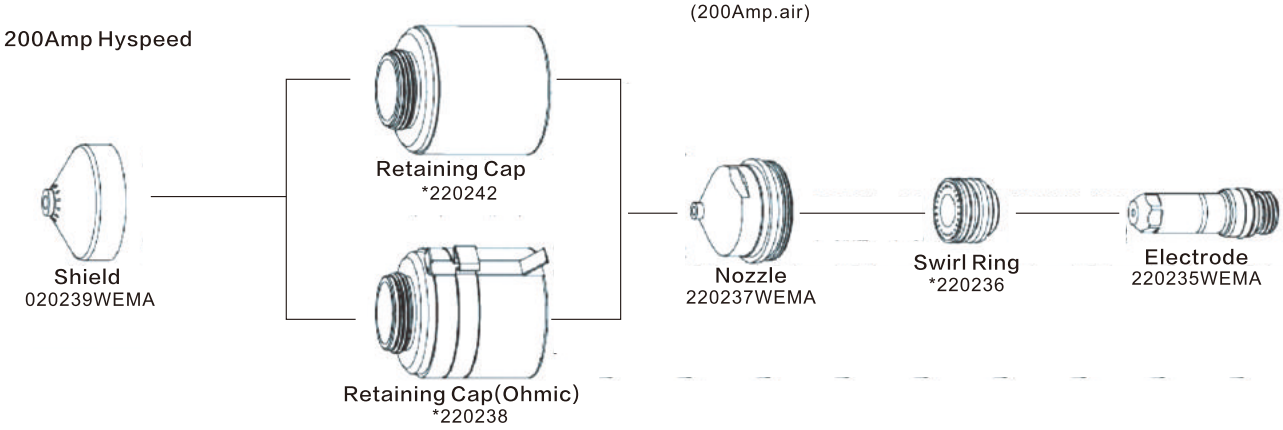

HYPERTHERM、MAX200、HT2000/Hyspeed HT2000 are the registered trademarks of Hypertherm,Inc-Lissam is no way affiliated with the above-named manufacture and its trademarks. References to the above name machines, torches, consumables, and reference numbers are for convenience only.

PLASMA TORCH PARTS

HPR130 Mild steel

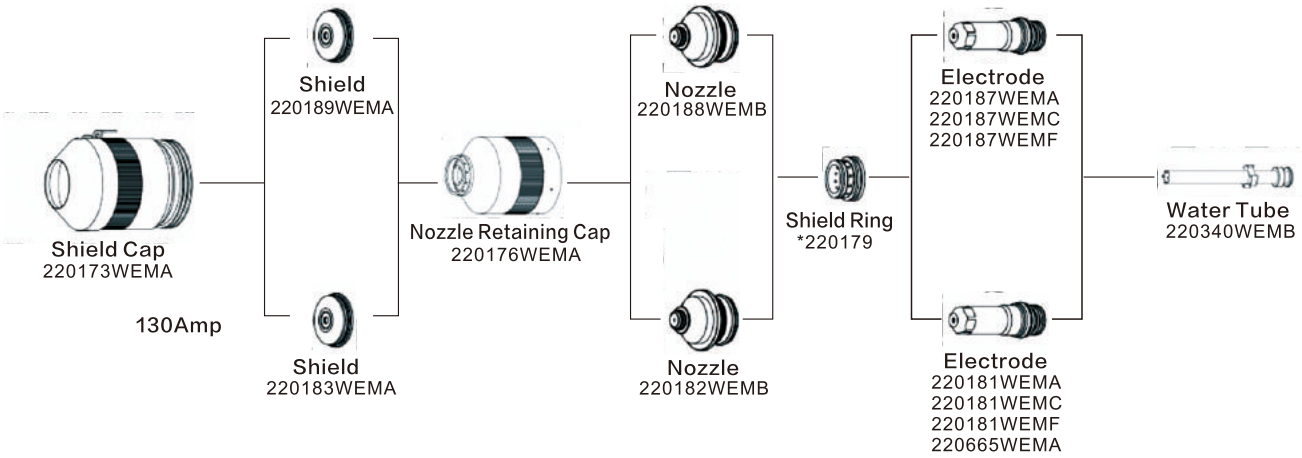

HPR260 Mild steel

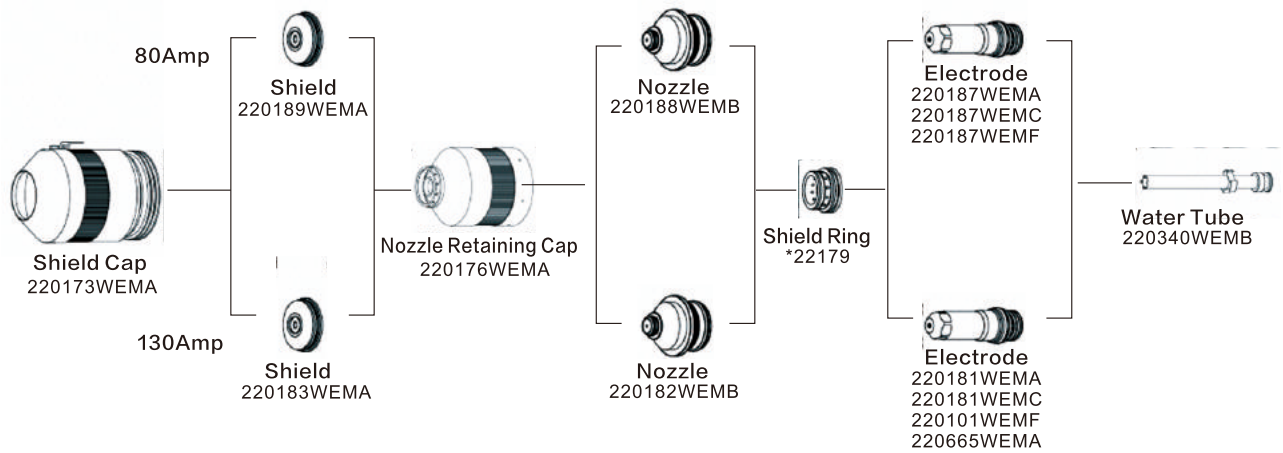

HYPERTHERM、HPR130、HPR260 are the registered trademarks of Hypertherm,Inc-Lissam is no way affiliated with the above-named manufacture and its trademarks. References to the above name machines, torches, consumables, and reference numbers are for convenience only.

ZHEJIANG LISSAM WELDING EQUIPMENT CO.,LTD
Http:// www.lissam.com E-mail: lissam@vip.163.com

PLASMA TORCH PARTS

HPR260 Mild steel

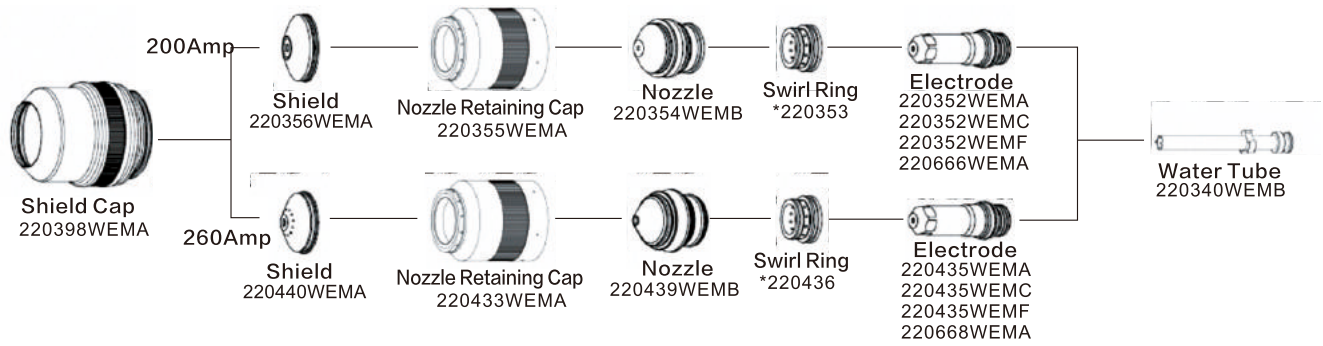

HPR260-BEVEL Mild steel

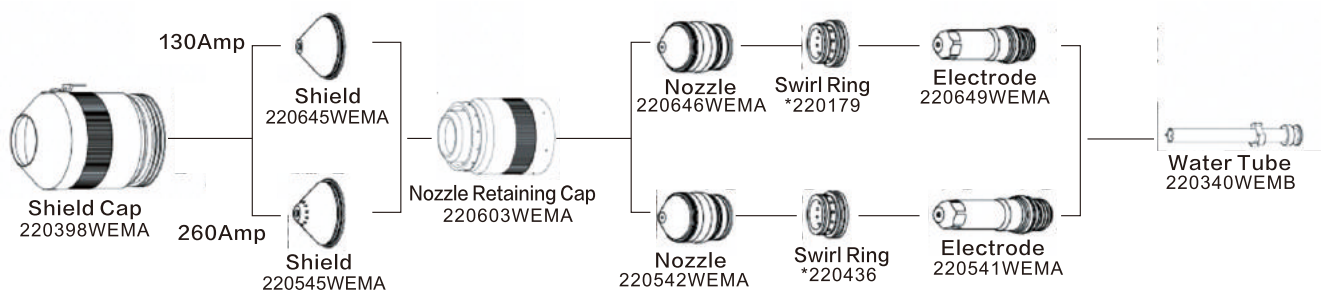

HPR130XD Mild steel

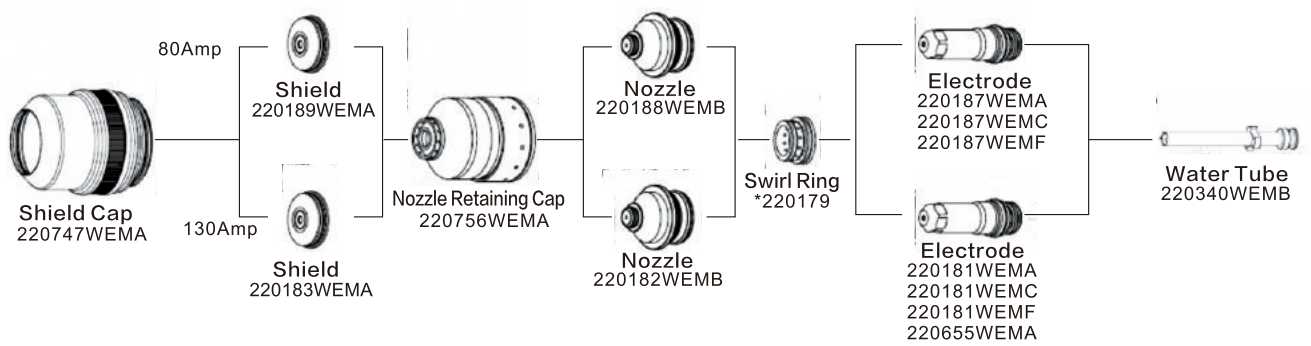

HYPERTHERM、HPR260、HPR1230XD are the registered trademarks of Hypertherm, Inc-Lissam is no way affiliated with the above-named manufacture and its trademarks. References to the above name machines, torches, consumables, and reference numbers are for convenience only.

PLASMA TORCH PARTS

HPR260XD Mild steel

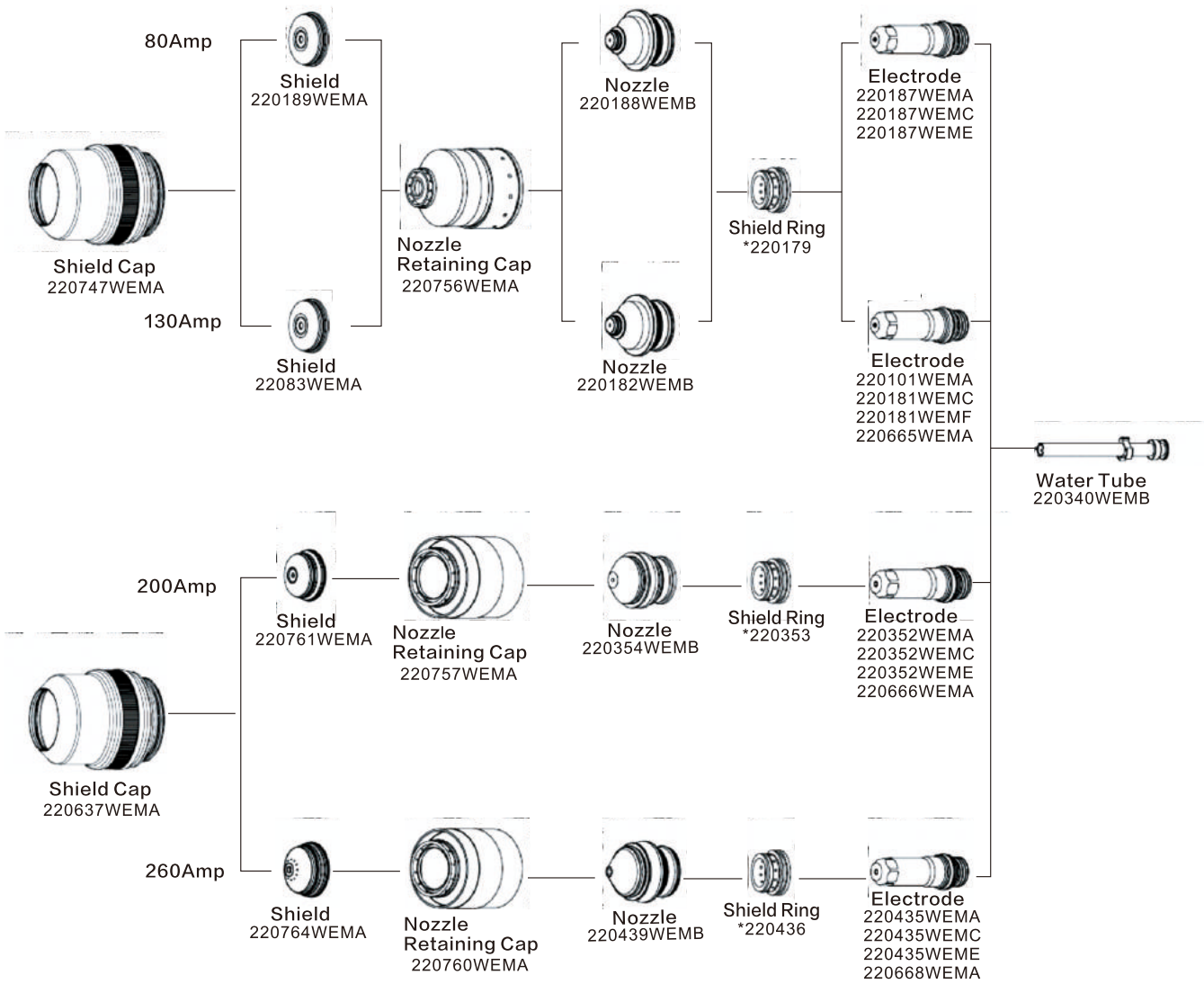

HYPERTHERM、HPR260XD are the registered trademarks of Hypertherm, Inc-lissam is no way affiliated with the above-named manufacture and its trademarks. References to the above name machines, torches, consumables, and reference numbers are for convenience only.

ZHEJIANG LISSAM WELDING EQUIPMENT CO.,LTD
Http:// www.lissam.com E-mail: lissam@vip.163.com